LANAIR
WASTE OIL HEATERS

PRO SERIES:

LS-150, LS-225, LS-225D, LS-300, LS-300D

OPERATION AND INSTALLATION MANUAL

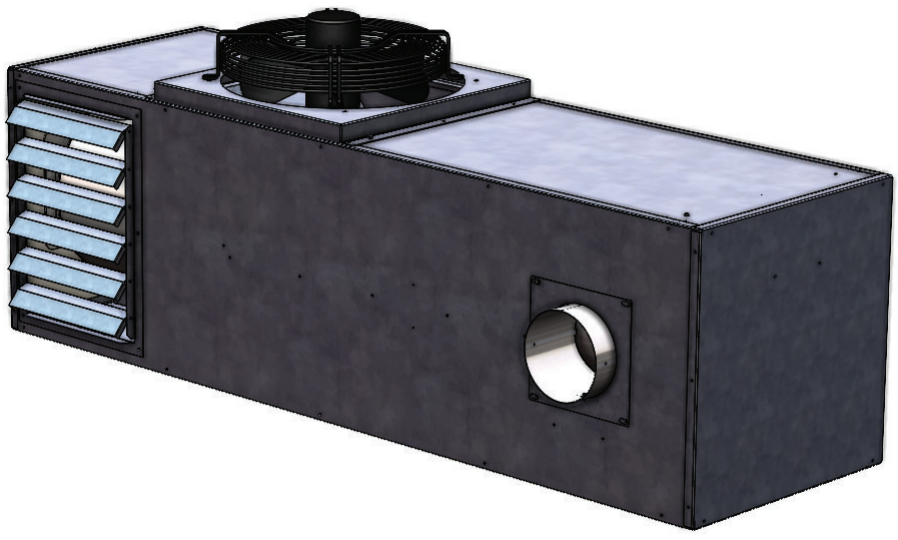

Lanair Products LLC
4109 Capital Circle
Janesville, Wisconsin 53546
1-888-370-6531
www.lanair.com

NOTES:

SAFETY, CODES, AND REGULATIONS

Thank you for the purchase of a Lanair waste oil furnace. Lanair furnaces are designed and tested for safe, reliable long term operation.

Proper installation, fuel quality control, and regular maintenance are required.

Please read and understand this manual completely before attempting to install, operate, or service the furnace. If you have any questions or would like a digital copy of this manual, please go to www.lanair.com.

CONVENTIONS USED IN THIS MANUAL

For your safety, this manual uses the following definitions and signal words to identify hazards:

⚠DANGER **Danger**: Indicates an imminently hazardous situation which, if not avoided, will result in death or serious injury. This signal word is limited to the most extreme situations.

⚠WARNING **Warning**: Indicates a potentially hazardous situation which, if not avoided, could result in death or serious injury.

⚠CAUTION **Caution**: Indicates a potentially hazardous situation which, if not avoided, may result in minor or moderate injury. It may also be used to alert against unsafe practices.

CAUTION **Caution (without alert symbol)**: Indicates an unsafe practice which, if not avoided, may result in product or property damage. Also used for general alerts.

PRODUCT SAFETY LABELS AND THEIR MEANING:

(NOT ALL LABELS USED ON ALL PRODUCTS)



Electrical Shock / Electrocution



Hand Crush / Force From Side



Flammable Material



Explosion



Burn Hazard / Hot Surface



Explosion / Release of Pressure

Important Information

- **⚠WARNING** This heater is for **commercial** and **industrial** use only. **This unit is not intended for residential use.**

• The heater's chimney and electrical connections must be installed and/or inspected by a properly licensed contractor prior to operation. The installer must be trained and fully familiar with the installation and operation of oil-fired heaters. Lanair does not provide, endorse, or recommend any third-party contractors for these services.

• Installation of this unit must be made in accordance with state and local codes.

N.F.P.A. (National Fire Protection Association Publications for Heater Installation)

NFPA No. 30	Flammable and Combustible Liquids Code
NFPA No. 31	Standard for the Installation of Oil Burning Equipment
NFPA No. 70	National Electric Code
NFPA No. 80 A&B	Repair Garages and Parking Structures
NFPA No. 211	Standard for Chimney, Fireplaces, Vents, and Solid Fuel Burning Appliances

The above standards are available from the National Fire Protection Assn., Battery March Park, Quincy, MA 02269; https://www.nfpa.org/

• Read and familiarize yourself with these instructions and associated photos, diagrams, and illustrations before beginning installation or operation. These instructions should be followed closely to achieve the best possible results.

• If you have questions or concerns at any time during the installation contact Lanair Technical Phone Support.

• Check to make sure you have all the required components needed for proper installation and operation.

• Check each component for visible damage. If you find a damaged component, contact Lanair Technical Phone Support for a replacement. Do not install damaged parts.

• This heater is designed to provide economically and environmentally friendly disposal of waste oil. Due to the nature of the fuel used, this heater should not be relied upon as the sole source of heat.

• Read and understand the warranty. See warranty QR code on the back of this manual.

Table of Contents:

Safety, Codes, and Regulations ..... Page 3
Important Information ..... Page 4
Table of Contents ..... Page 5
Systems & Controls ..... Page 9
Assemblies & Components ..... Page 15
Installation Requirements ..... Page 25
Fuel & Air Supply Requirements ..... Page 28
Placement Guide ..... Page 30
Installation Guide ..... Page 30
Electrical & Wiring Diagrams ..... Page 55
Fuel Pump Priming ..... Page 59
Burner Startup Procedure ..... Page 60
Flame Adjustment ..... Page 61
Maintenance & Service ..... Page 64
Troubleshooting ..... Page 72
Return Guidelines & Warranty Conditions ..... Page 77
Warranty ..... Page 78
Registration QR Code ..... Page 80

NOTES:

Specifications & Safety

Specification	LS-150	LS-225	LS-225D	LS-300	LS-300D
Height (in.)	22	24	24	26	26
Width (in.)	22	24	24	26	26
Length (in.)	70.2	80.3	80.3	85.2	85.2
Weight (lbs)	295	340	375	390	420
Firing Capacity (GPH)	1.1	1.6	1.6	2.0	2.0

Minimum Clearance to Combustibles
Top 20”
Bottom 24”
Sides 20”
Rear* 20”
Front* 24”
Chimney Connector 20”

*You will need up to 80” of clearance either in front of or behind the heater for servicing. See the Cleaning section.

THIS HEATER IS DESIGNED TO BURN THE FOLLOWING APPROVED FUELS:
Used 5W through 50W crankcase oils (including synthetics), used ATF, and No. 2 fuel oil. Such oils may contain gasoline. DO NOT BURN UNAPPROVED FUELS.

Only “D” models are designed for attachment to or use with ductwork. Please confirm that you have purchased the correct model for your application.

⚠ DANGER Do not attempt to start the burner when excess oil, oil vapor, or fumes have accumulated. Never press the red button on the oil primary control more than twice. This could cause excess vapor or fuel to ignite, resulting in damage to the heater and/or chimney.

⚠ DANGER Do not store or use gasoline, or any other flammable liquid and/or vapors near this heater.

⚠ DANGER Special precautions on the handling and storage of waste oils must be observed. Fuel storage must be located a minimum of 5 feet from the heater in an approved receptacle.

⚠ DANGER This heater is not designed for use in hazardous atmospheres such as paint shops, feed mills, or installations where explosive or flammable conditions are present or could occur.

LS-150 SIDE VIEW

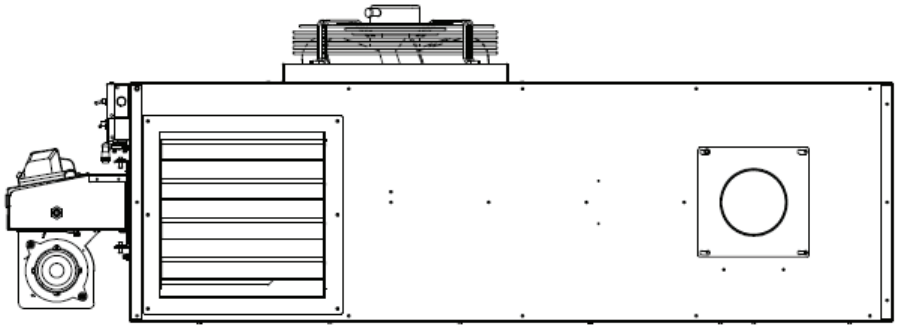

LS-225 SIDE VIEW

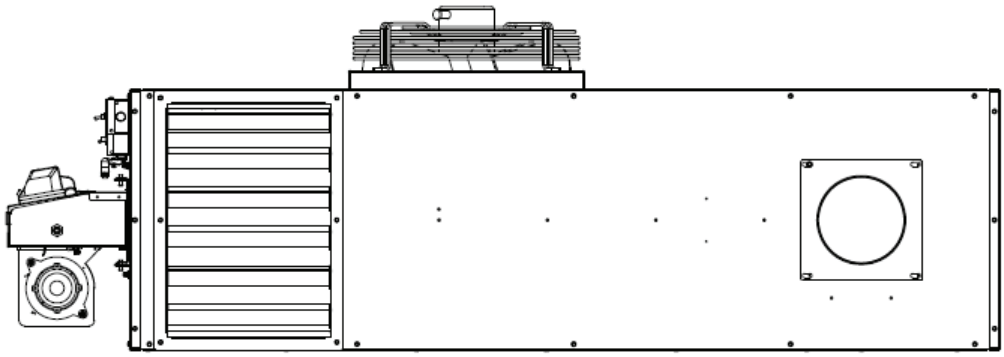

LS-225D SIDE VIEW

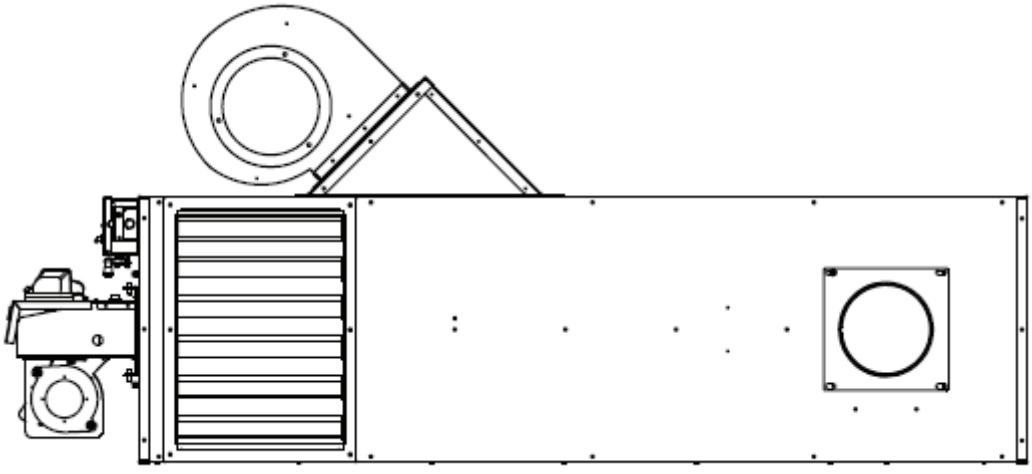

LS-300 SIDE VIEW

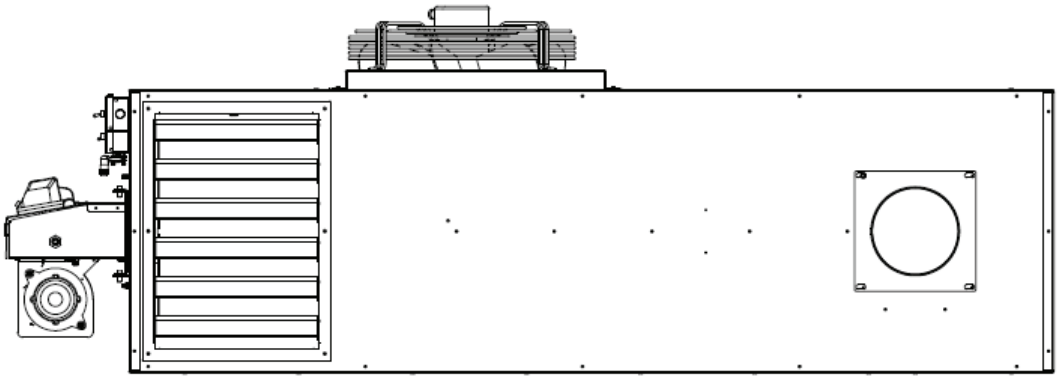

LS-300D SIDE VIEW

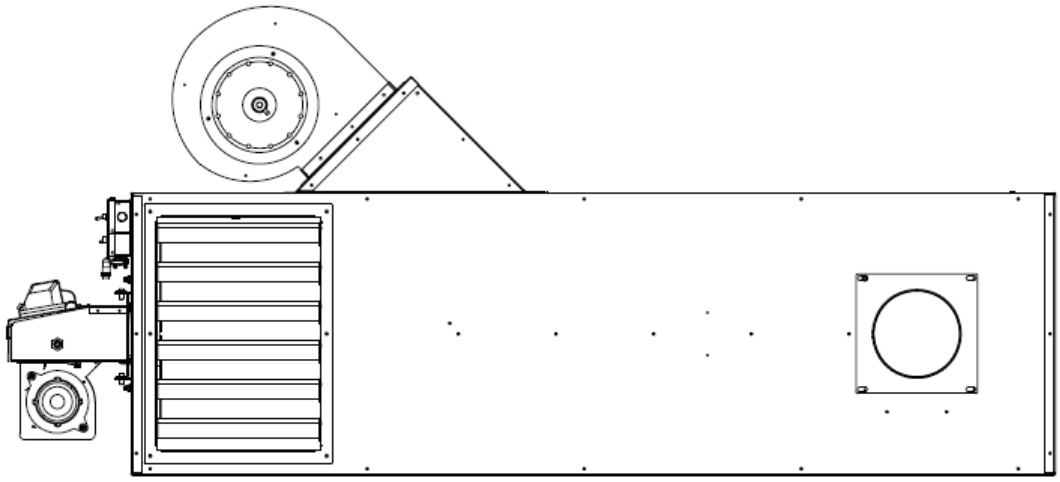

LS-150

Top View

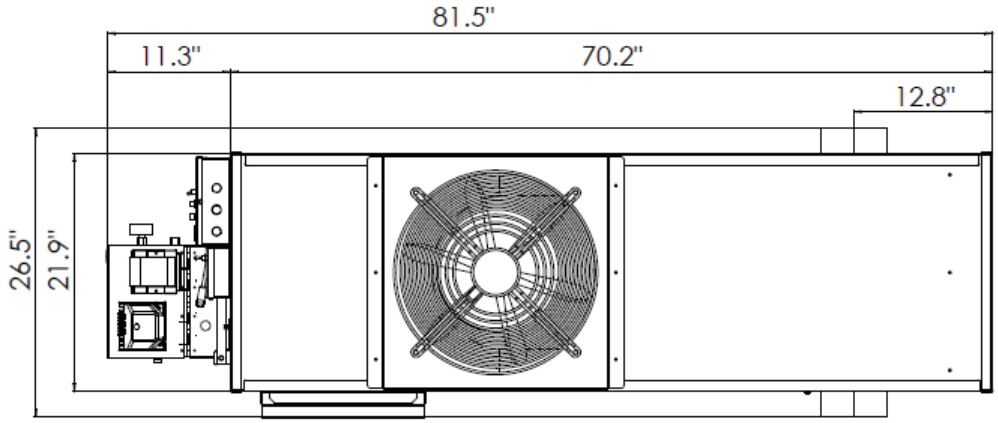

Bottom View

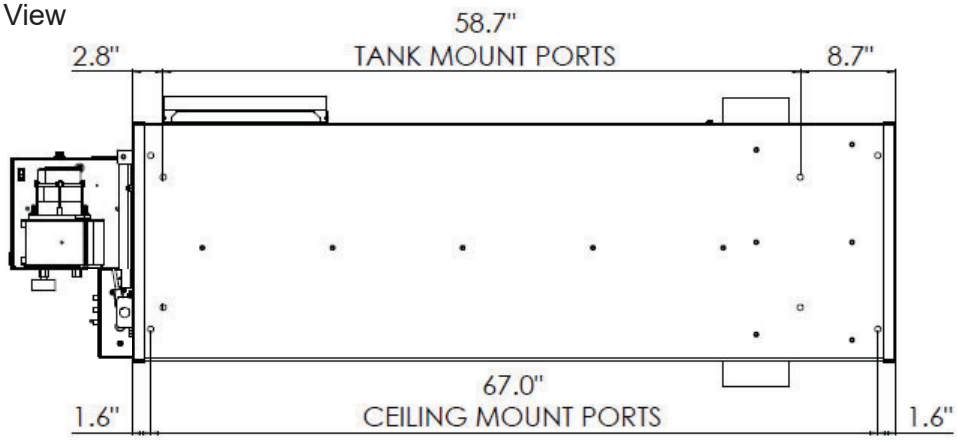

Front View

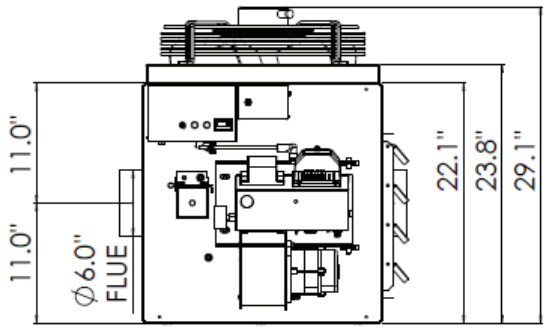

LS-225

Top View

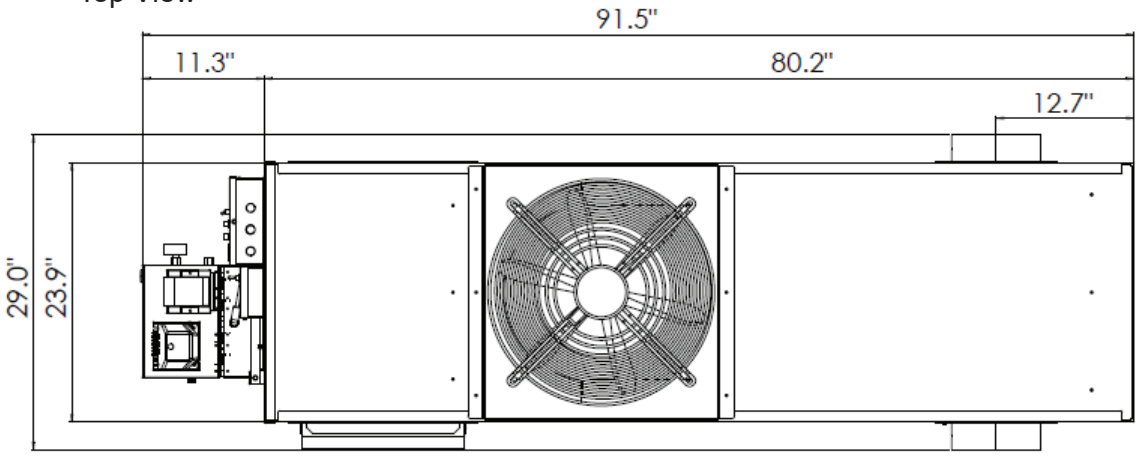

Bottom View

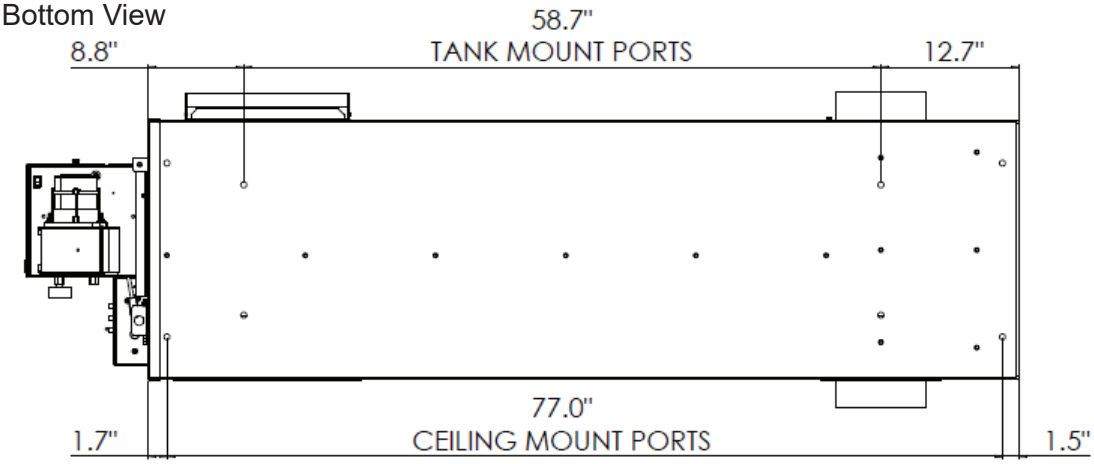

Front View

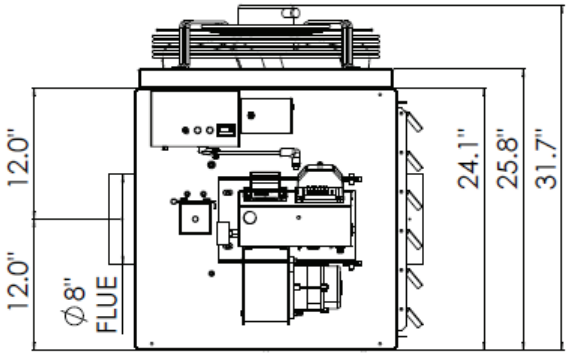

LS-225D

Top View

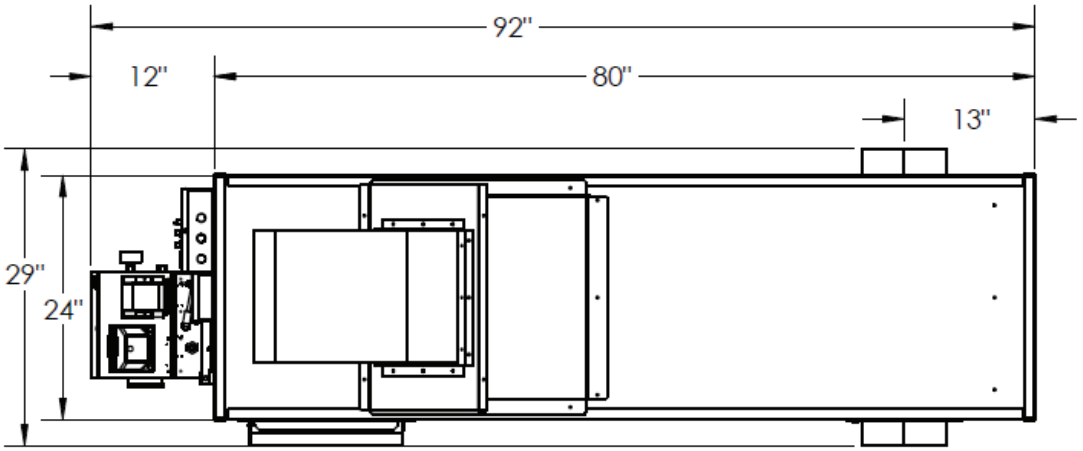

Bottom View

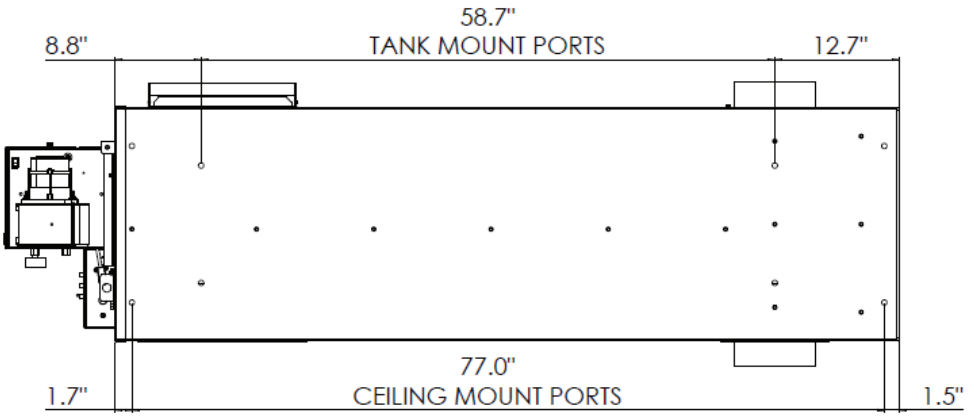

Front View

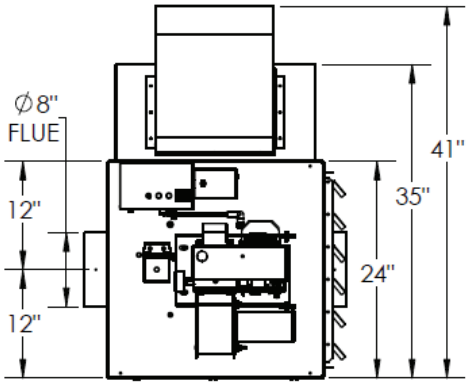

LS-300

Top View

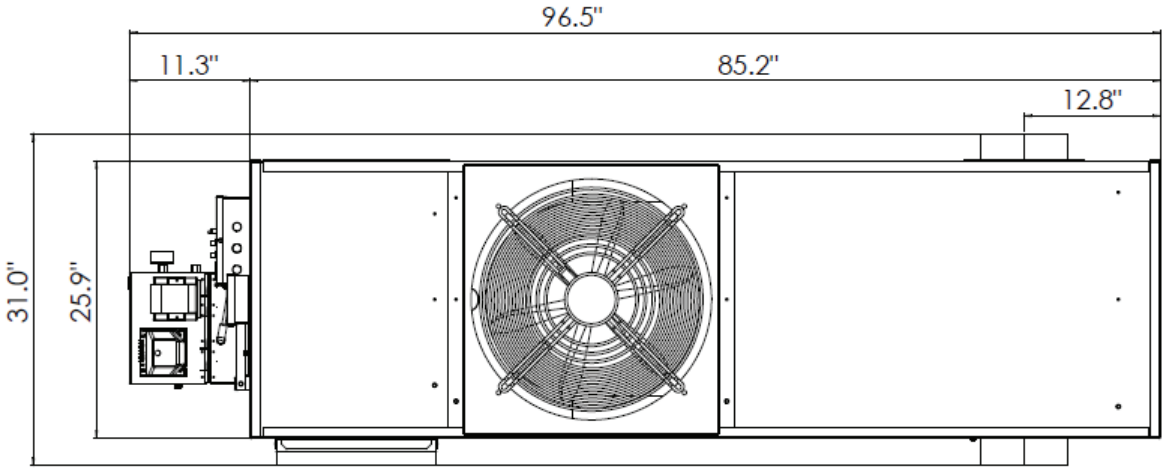

Bottom View

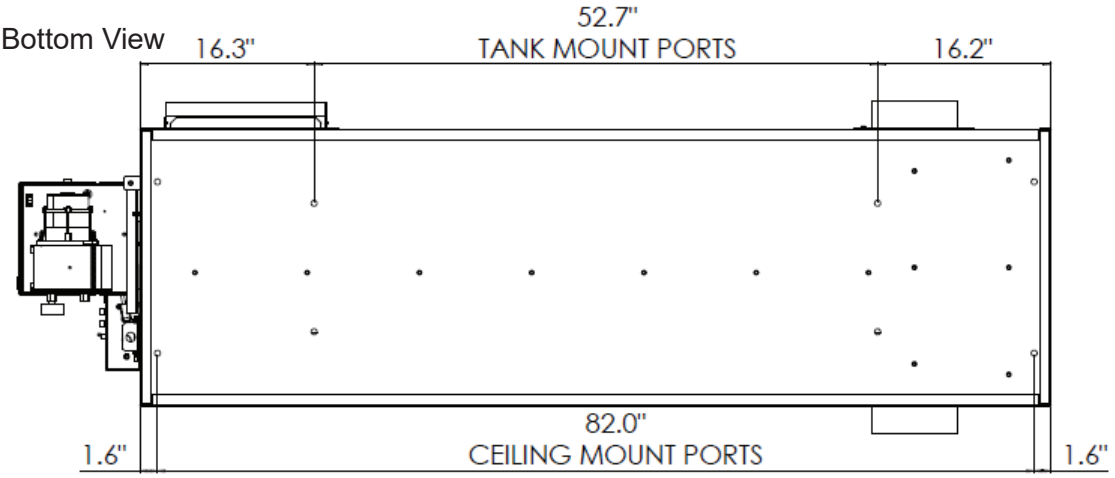

Front View

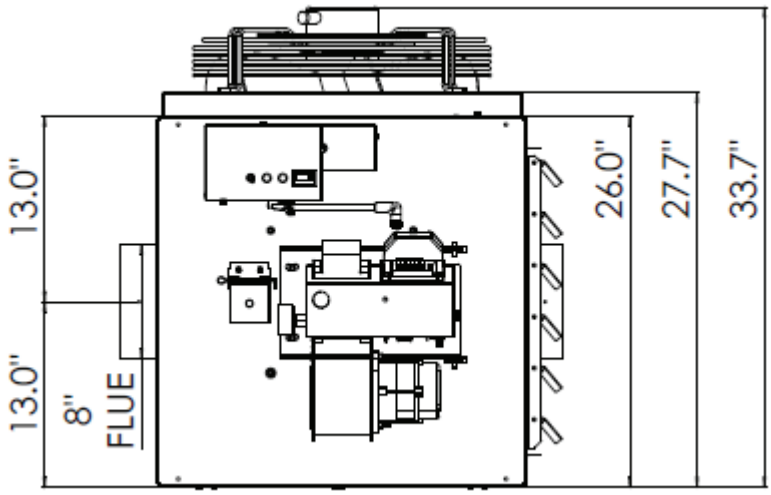

LS-300D

Top View

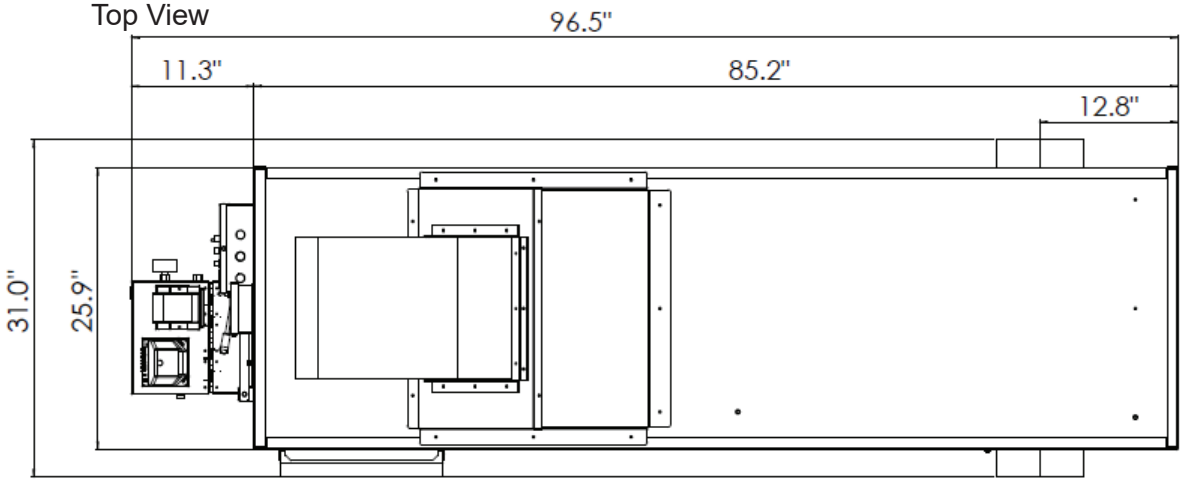

Bottom View

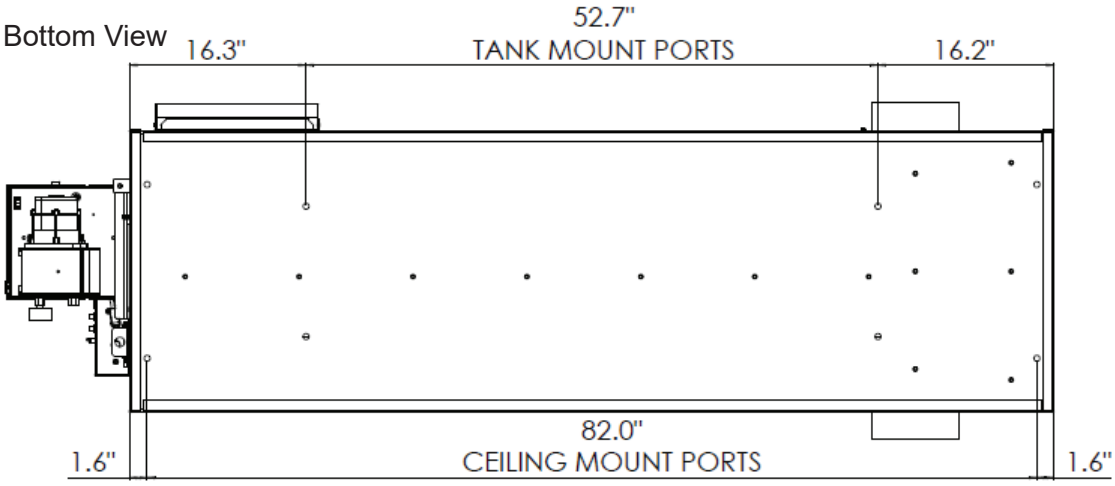

Front View

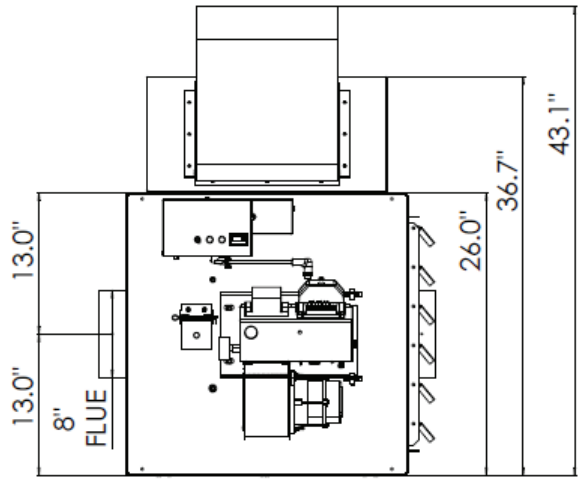

Assemblies & Components

Assemblies

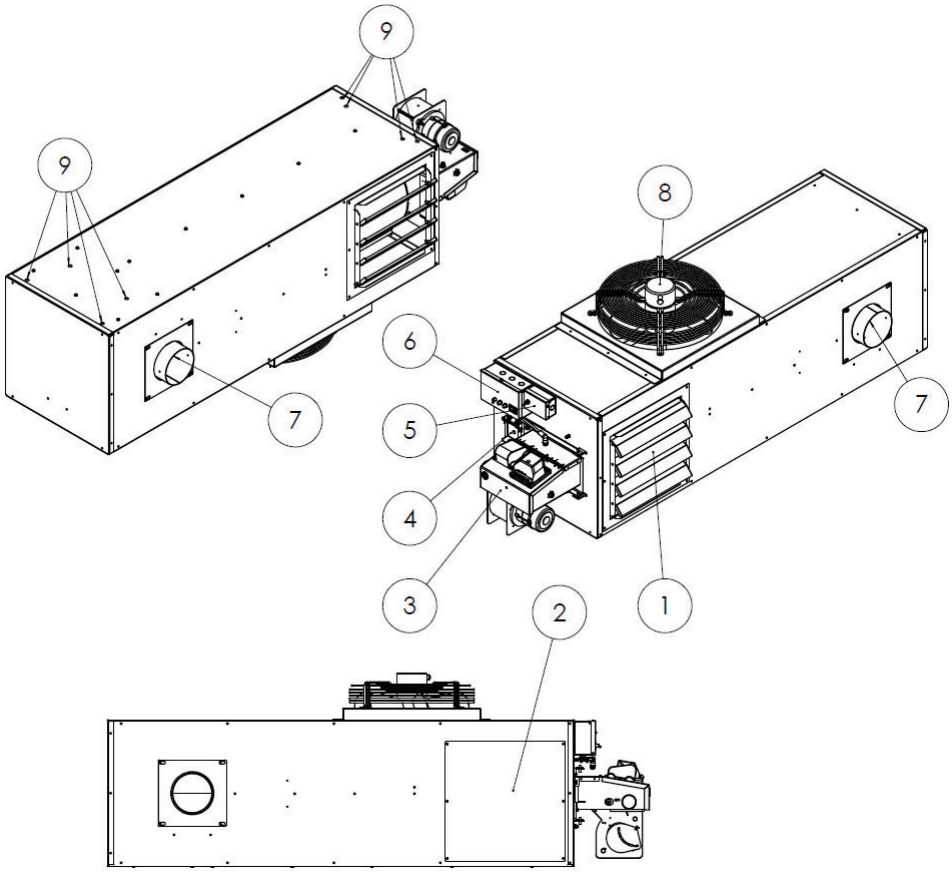

No.	Description
1	Adjustable Louvers
2	Louver Exit Cover
3	Burner Assembly
4	Flame View Port
5	Fan Limit Assembly
6	Electrical Box Assembly
7	Chimney Outlet
8	Fan Assembly
9	Mounting Ports
*8	Blower Assembly (Ductable Units)

Burner Assembly

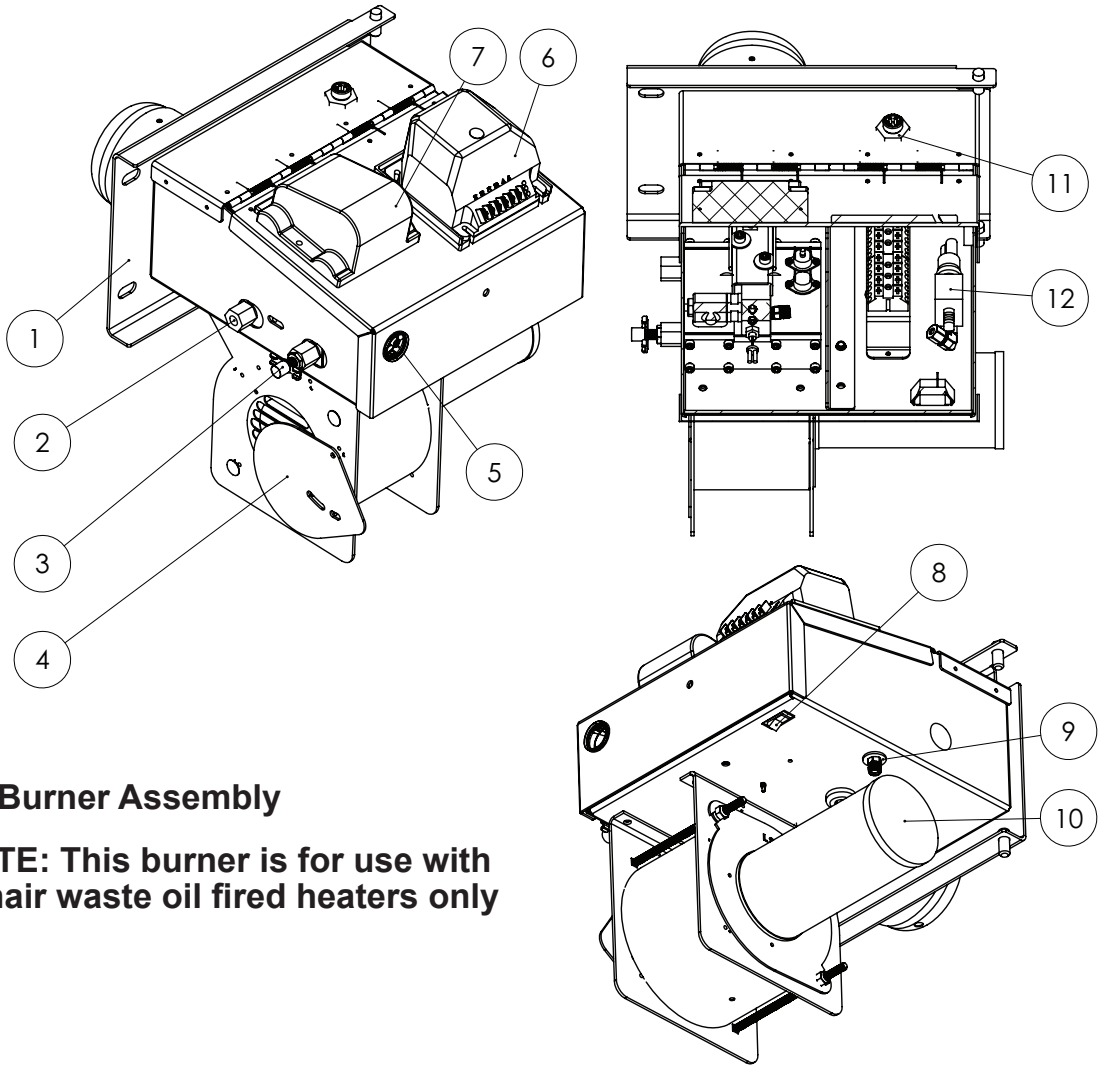

LS Burner Assembly

NOTE: This burner is for use with Lanair waste oil fired heaters only

No.	Description
1	Mounting Plate
2	Fuel Line Inlet
3	Oil Bleed Valve
4	Combustion Air Baffle
5	View Port
6	Oil Primary Safety Control
7	Ignition Transformer
8	Preheater Switch
9	Air Supply Inlet
10	Combustion Blower Motor
11	Quick Disconnect Receptacle
12	Air Solenoid Valve

Oil Preheater Nozzle line Assembly

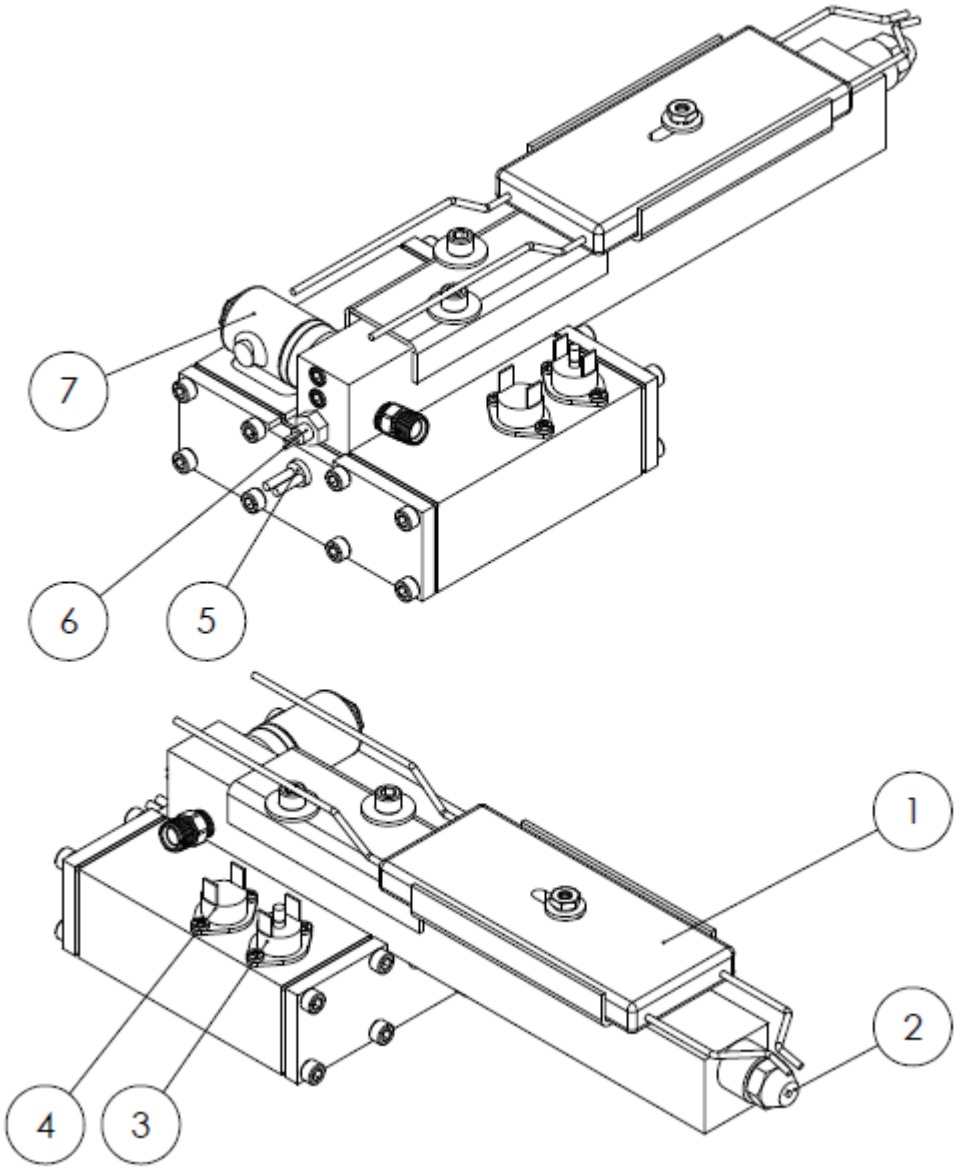

No.	Description
1	Ignitor Assembly
2	Nozzle
3	High Limit Reset Switch
4	Preheater Thermostat
5	Oil Block Cartridge Heater
6	Air Block Cartridge Heater
7	Oil Solenoid
8	Ignitor-Mounted Diffuser Plate (Not Shown)

Tank Assembly

A metering pump will supply the precise amount of fuel for your heater model. This minimizes the need for flame adjustments and allows for pumping over longer distances.

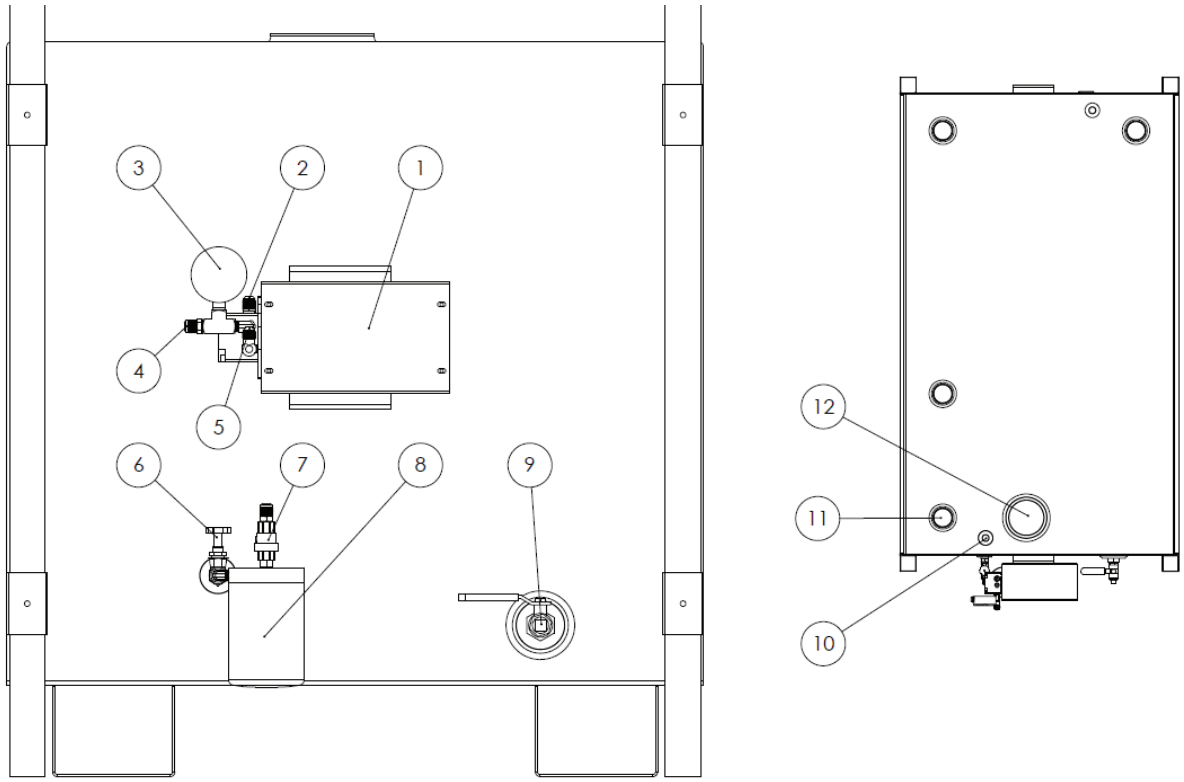

No.	Description	No.	Description
1	Pump Assembly	10	Relief Port (2 PLCS)
2	Fuel Outlet	11	Fill Port/Primary Vent Port (Use port closest to drain for filling) (4 PLCS)
3	Fuel Inlet Pressure (Vacuum) Gauge	12	Emergency Vent Port
4	Fuel Inlet	**Suction and return lines (not shown) should be 3/8" copper. Your installation may differ if your unit is not installed with the Lanair 250 gallon tank. Contact Lanair Technical Phone Support for` assistance with special circumstances.**	
5	Pressure Relief Outlet		
6	Firestop Valve		
7	Check Valve		
8	Fuel Filter		
9	Drain Valve		

Pump Assembly

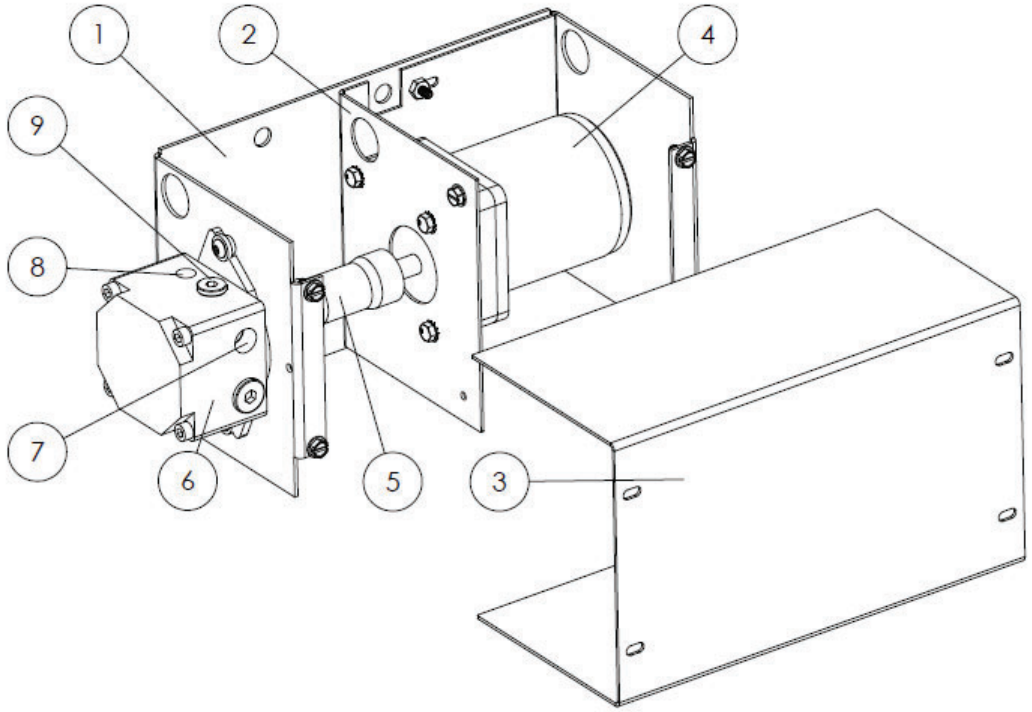

No.	Description
1	Pump Housing
2	Pump Motor Bracket
3	Pump Motor Cover
4	Pump Motor
5	Pump Motor Coupling
6	Pump
7	Oil Inlet
8	Oil Outlet
9	Pressure Relief Outlet

TANK MOUNT HEATER/CHIMNEY

- Must use Class-A double-wall pipe for roof penetration, exterior chimney, and near combustible surfaces.
- Total vertical, unbroken chimney length must be at least 10 ft. to establish proper draft. Vertical rise must meet or exceed horizontal run.
- Chimney cap must be at least 3 ft. taller than any object within 10 ft.
- Keep at least 3 ft. to barometric damper from any fan, air source/return, etc.
- Check local codes for exterior clearance guidelines.
- Minimize or eliminate horizontal runs and angle/elbow connections, where possible. Consider chimney cleanout access when installing. If your installation fails to achieve proper draft, consider lengthening the vertical chimney.
- Contact Lanair for assistance with special circumstances.

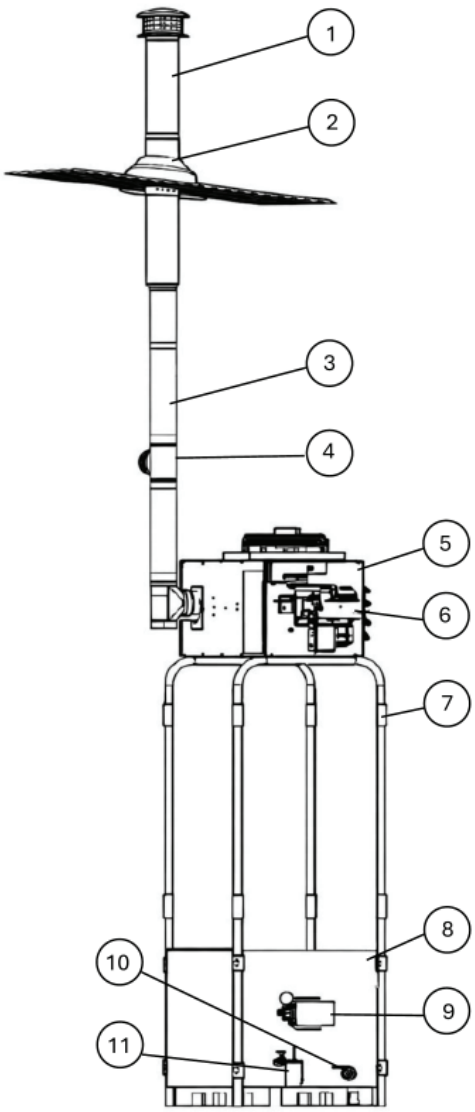

No.	Description	No.	Description
1	Double-Wall Chimney	9	Pump Assembly
2	Roof Penetration	10	Drain Valve Assembly
3	Single Wall Chimney	11	Filter Assembly
4	Tee and Barometric Damper	**Compressed air supply, electrical shutoff switch, tank vent, and additional chimney material not included. Installation configurations vary. Additional parts may be necessary. Contact Lanair for Assistance with special circumstances.**	
5	Furnace		
6	Burner		
7	Tank Mount Supports		
8	250 Gallon Tank		

CEILING/WALL MOUNT HEATER/CHIMNEY

- Must use Class-A double-wall pipe for roof penetration, exterior chimney, and near combustible surfaces.
- Total vertical, unbroken chimney length must be at least 10 ft. to establish proper draft. Vertical rise must meet or exceed horizontal run.
- Chimney cap must be at least 3 ft. taller than any object within 10 ft.
- Keep at least 3 ft. to barometric damper from any fan, air source/return, etc.
- Use 3/8”-16 TPI threaded rod (not included) to hang the heater from load-bearing structure.
- Heater must be hung/mounted at least 8 ft. above the floor.
- Check local codes for exterior clearance guidelines.
- Minimize or eliminate horizontal runs and angle/elbow connections, where possible. Consider chimney cleanout access when installing. If your installation fails to achieve proper draft, consider lengthening the vertical chimney.

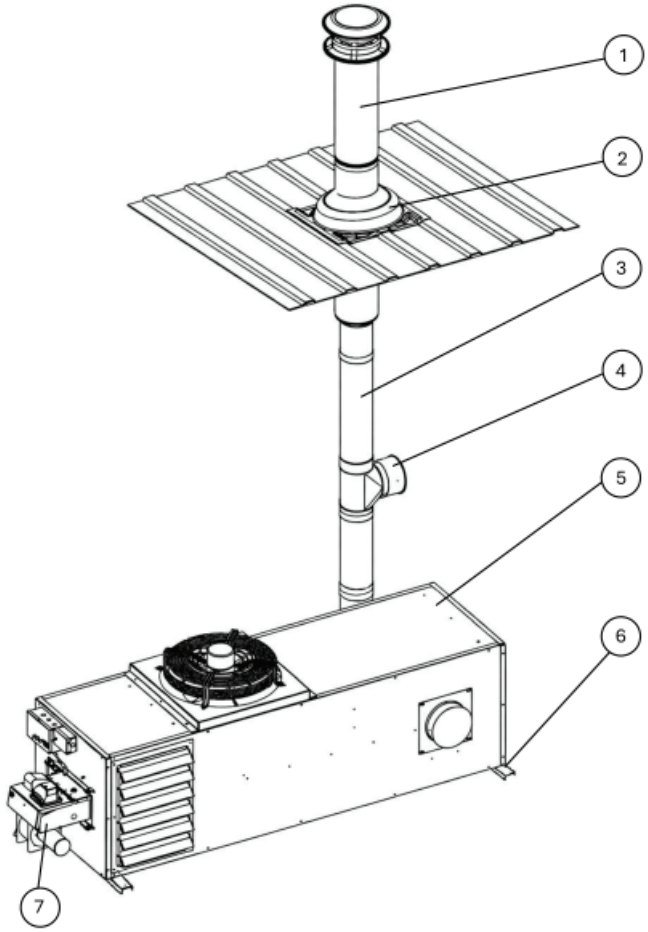

- Contact Lanair for assistance with special circumstances.

No.	Description	
1	Double-Wall Chimney	**Compressed air supply, electrical shutoff switch, tank vent, and additional chimney material not included. Installation configurations vary. Additional materials may be necessary.** **Contact Lanair for Assistance with special circumstances.**
2	Roof Penetration	
3	Single Wall Chimney	
4	Tee and Barometric Damper	
5	Furnace	
6	Mount Brackets	
7	Burner	

Components

Barometric Draft Control - The barometric draft control automatically maintains a preset chimney draft. It is located in the chimney connector or chimney.

Air/Oil Preheater - The air/oil preheater is an assembly that preheats the atomizing air and fuel to a predetermined temperature to properly combust used oil. The air/oil preheater is located in the burner. Preheater should run at least 10 minutes before operation.

Metering Pump - The metering pump delivers fuel from your oil storage tank to the burner. It also controls the volume of fuel. The metering pump should be mounted with the motor shaft oriented horizontally.

Prime Switch - The prime switch manually actuates the fuel pump. This is required to remove air from the suction line of your heater. The green light on your electrical box should light 15 seconds after call for heat is established.

Room Thermostat - The room thermostat automatically controls the on/off operation of the heater according to the setting of the desired room temperature. The thermostat works in conjunction with the oil primary safety control.

Combustion Blower - The combustion blower provides air necessary for burning fuel. Without combustion air, your heater will not operate.

Centrifugal Switch - The centrifugal switch proves that the combustion blower is active. It will not let the burner operate without it.

Oil Primary Safety Control - The oil primary control is mounted on top of the burner's electrical box. When the thermostat calls for heat the oil primary control starts the burner by switching on the air solenoid valve, oil solenoid valve, ignition transformer, combustion air blower, and the fuel pump. The oil primary control works in conjunction with the flame sensor (also called a cad cell).

Flame Sensor (CAD Cell) - The flame sensor is mounted inside the burner cover, and faces the flame. The flame sensor monitors the light level inside the combustion chamber to ensure a flame is present. If there is a loss of flame the primary control will go into its recycle mode. After 60 seconds, the primary control will attempt to restart the burner. When this happens, if a flame is established, the burner will continue to function. Upon startup, if no flame is established in 30 seconds, the primary control will lock out, requiring the reset button to be pressed manually. Do not press the reset button more than twice. If the burner fails to function properly, refer to troubleshooting section.

Electric Air Solenoid Valve - The electric air solenoid valve is controlled by the oil primary control. It acts as a shut-off valve. It's open during operation, and closed when the burner is off. The electric air solenoid valve is located inside the burner's electrical box.

Air Pressure Switch - The air pressure switch proves that there is atomizing air from the air supply source to the burner and will not let the burner operate without it.

Electric Oil Solenoid Valve - The air-proved oil solenoid valve controls fuel flow out of the nozzle when the electric air solenoid valve opens.

Fan/Limit Control - The fan/limit control monitors the temperature of the air inside the cabinet. When the air reaches a set point, it will switch on the heater fan. When the temperature in the cabinet drops below a set point, the fan/limit control will turn the fan off. If the temperature exceeds a fixed set point, it switches the burner (Oil Primary Control) off until the temperature drops to a safe level. The burner will then restart.

CAUTION If the heater shuts down due to "High Limit" temperature conditions, the cause must be determined and corrected before further use (over firing the unit is normally what causes this condition).

The fan/limit control also features an external switch to turn the fan/blower on manually, bypassing its automatic function. The Fan/Limit Control is located on the top of the cabinet, towards the front of the unit above the burner.

Snap Disc (Temperature Control/Limit Switches) - The snap discs control the temperature of the air/oil preheater assembly with two resistance type cartridge-heating elements. The snap discs are mounted on the oil preheater inside the burner.

Nozzle - The nozzle uses air pressure to help deliver fuel through its small orifice, and to atomize the fuel for proper combustion. The nozzle is located on the end of the air preheater opposite the fuel valve. Replace the nozzle annually, as they are prone to wear by contaminants in waste oil.

Adjustable Louvers

The LS Series heaters have adjustable louvers. Louvers are riveted on each end and can be pivoted up and down to change the direction of the outlet air.

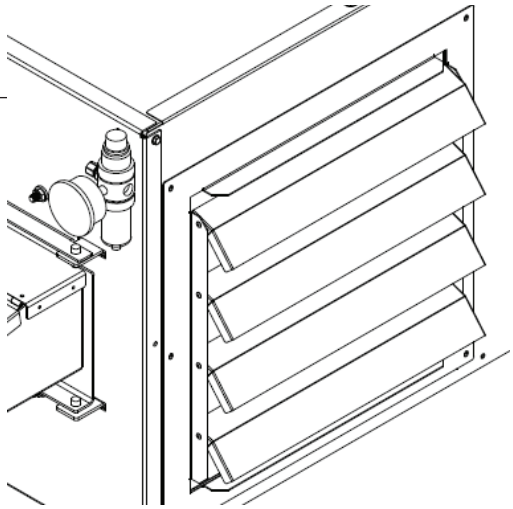

Ductable Applications

Ductable LS units are designed for outlet-air ducting, and can have ductwork attached to either side of the furnace. The louver panel must be removed before attaching ductwork. A spare panel is attached to the non-louvered side of your furnace. Remove the spare panel, cut accordingly, then replace louver panel with cut panel. Leave the non-ducted outlet covered. The heater's ductwork must be installed and/or inspected by a properly licensed contractor prior to operation. Lanair does not provide, endorse, or recommend any third-party contractors for these services. **Existing ductwork may not meet the requirements of this furnace.**

Outlet Dimensions

LS-150	15"x15"
LS-225(D)	20.5"x15"
LS-300(D)	21.5x15"

Barometric Damper

The barometric damper balances the draft through the combustion chamber and allows for adjustments. It can be installed in various chimney orientations, but ensure that the barometric damper is installed with the pivot hinge parallel to the ground with the attached weight closing the door when no draft is present.

Adjusting the weight clockwise (bringing the weight closer to the damper door) will allow the door to open more when a draft is present, increasing the draft through the damper and decreasing the draft through the combustion chamber (lowering the manometer reading).

Adjusting the weight counterclockwise (taking the weight farther from the damper door) will cause the door to open less when a draft is present, decreasing the draft through the damper and increasing the draft through the combustion chamber (raising the manometer reading).

NOTE: Keep the damper free of dust and debris and check for proper draft daily.

Front View (Vertical Orientation)

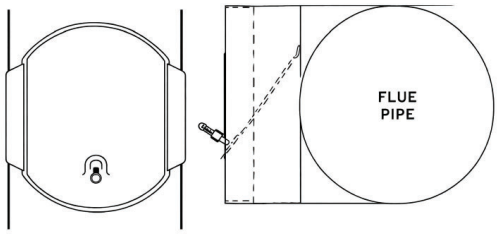

Side View (Horizontal Orientation)

Installation Requirements

- Do not install the heater on a combustible surface of any kind. For minimum clearance to combustible material, see general specifications and safety.
- Install the heater in a location to utilize total heat throw (blown hot air).
- Install the heater in a location to permit a correct outdoor chimney exit to eliminate down drafts, and provide easy chimney installation and maintenance. Class-A chimney MUST be used when passing through any wall, ceiling, or piping outside of the building. See chimney installation section.
- Install the heater as close as possible to fuel supply while maintaining clearance to combustibles.
- Before suspending the heater check the supporting structure and reinforce if necessary to support the weight of the heater/system.
- Use 3/8”, 16 TPI, steel threaded rod and locking nuts to suspend the heater from a capable load carrying ceiling structure when not mounting to a Lanair Waste Oil Storage Tank.
- **⚠WARNING** The heater must be suspended level for proper operation. A heater that is not level could cause a hazardous situation in which personal injury or property damage may result.
- **⚠DANGER** Safe operation of any gravity vented heating appliance requires a proper air make-up system to prevent the heater exhaust gases from being drawn into the building. Exhaust fans and paint booths will cause draft problems.
- Never vent this heater into another heating appliance’s chimney. Never vent into Class-B chimney. This heater must have its own separate Class-A chimney.
- Inspect and maintain the chimney annually.
- **CAUTION** A U.L. listed barometric damper **MUST** be installed in the chimney or the **WARRANTY WILL BE VOID**. Do not reduce the vent pipe.

Barometric Damper Position

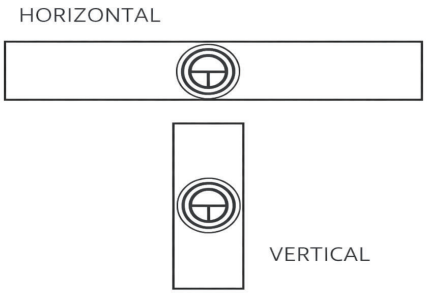

NOTE: Barometric Damper may be mounted horizontally or vertically. Angle gate pins must be horizontal for proper operation

⚠DANGER

Failure to provide proper venting of the heater exhaust gases could result in death, serious injury, and/or property damage.
FOLLOW CHIMNEY MANUFACTURERS INSTRUCTIONS.

- Do not install heat reclaimers, manual draft controls, or any other type of restrictive control(s) in the chimney.
- Install clean out tee with a cap, at the transition of the chimney. **FOLLOW CHIMNEY MANUFACTURERS INSTRUCTIONS.**
- Use Class-A insulated chimney pipe to vent exhaust gases through wall, ceilings, attics, roofs, combustibles, etc. Class-A chimney must be used for the entire run, including penetration of the wall or ceiling.
- Vent chimney at least 3 feet above the roof and at least 3 feet higher than any portion of the building, roof, or obstruction within 10 feet of the chimney.
- The chimney cap should be at least 3' above the chimney exit through the roof.
- Do not use a rotating turbine chimney cap. In areas of high wind, a swiveling wind guard cap may be appropriate. Use a non-restrictive Class-A cap made for the type Class-A chimney you are using. Follow chimney manufacturer's instruction.
- The chimney must be capable of producing a negative -0.02 W.C. draft when cold and -0.05 W.C. draft when hot.
- If you are unable to attain the proper draft, check for exhaust fans in the building. To test if there is a problem, open an overhead door and see if you now have the proper draft. You may have to add one or more sections of Class-A chimney to the vertical run to get the proper draft.
- **⚠CAUTION The heater and chimney must be installed in accordance with all state and local codes. The heater must be installed in accordance with the specifications listed in this manual. The chimney must be installed per the chimney manufacturer's instructions.**

NOTE: Do not install chimney in front of the heater (in air stream of fan).

Chimney Draft Requirements

The Lanair heater should have a (negative) -0.02 draft reading when cold, and a (negative) -0.05 when hot. Check the heater after it has been running for 45 minutes. If the reading is not what it should be, adjust the barometric damper to achieve proper draft. The draft reading should be measured with the manometer included with the heater, or a comparable alternative. Consult your heating contractor when needed.

- The fuel supply tank and supply lines must be installed in accordance with the NFPA requirements, as well as state and local ordinances.
- Check state and local codes. In many areas, regulations require oil storage tanks located inside not to exceed 275 gallons individually, and are not to exceed a total capacity of 550 gallons in one building.
- **Locate the fuel supply tank inside the building, as close to the heater as possible while maintaining minimum clearances. To avoid issues with fuel flow, the tank should be located within the fuel pump's maximum outputs.**
- **The fuel supply tank must be mounted below the burner. Mounting the fuel supply tank above the burner will create head pressure and over-fire the burner voiding the warranty.**
- **Pitch the fuel supply tank 2º with the drain valve at the lowest end of the tank, to drain off water and sludge. Sludge may have to be removed manually.**
- **Local ordinances may require the fuel supply tank to have an emergency vent and/or be vented to building's exterior above the roof line. Check state and local codes. Keep the vent clear.**
- If mounting the heater to the tank, bolt the tank to the floor before beginning to install the heater.
- The top port nearest to the tank drain should be used for filling the tank.
- Label the fuel tank for the recommended fuels.
- Strain all fuel with a 50 X 50 mesh strainer before putting fuel into the tank.
- When filling the fuel tank with a motorized pump, never leave unattended to prevent over filling and/or spillage.

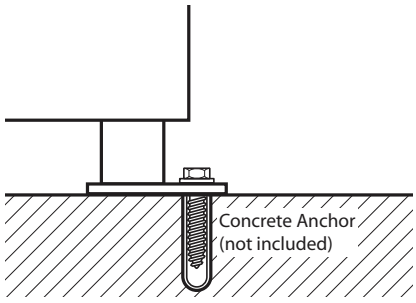

- Keep all tank ports except vent(s) closed unless filling the tank. Port sizes are 1/2", 2" and 4". Factory plugs are plastic. Plugs are upgradable to PVC if emergency venting is not required by local code.
- **CAUTION For optimum performance, the waste oil pump manufacturer recommends that oils up to 50W be maintained at 50˚ F minimum.**
- Must use a UL/ETL approved tank or fuel oil storage solution.

CAUTION

Install equipment in a location that is protected from vehicle traffic. Secure tank/heater/plumbing to permanent structure before fueling/running the system.

Fuel & Air Supply Requirements

- Limits for horizontal and vertical distance for fuel lines:
  - Max suction height = 5 feet
  - Max vertical rise = 15 feet
  - Max horizontal run = 50 feet
- Mount the fuel supply pump in a horizontal position (shaft horizontal) near the fuel supply tank.
- **The fuel pump/motor are intended for indoor use only.**
- **Clean all lines, fittings, and parts internally before assembly.** A small burr or piece of rust could plug the nozzle. The fuel pump relies on the fuel filter to remove foreign materials. Because of this, it is imperative that the fuel filter is changed when dirty. Purchase replacement or additional filters at lanair.com.
- Use thread sealing compound on all pipe thread connections. **Do not use teflon tape.**
- Ensure proper function on suction line gauge. This gauge will indicate when service is needed on the filter, pump or connections.
- Install a 3/8” copper line from the tee on the metering pump assembly to the fuel supply tank. Do not allow this line to submerge below the level of the oil. The use of a smaller line, rubber, plastic, or hydraulic line is unsafe and will void your warranty.
- **Do not allow anything to cover the outlet of the return line.**
- The fuel supply line must be run below the burner at all times. If the fuel supply line runs above the burner it will create head pressure. This head pressure will over-fire the burner voiding the warranty.
- Keep the fuel supply lines a minimum of 1” from any exterior walls of the building.
- **The fuel supply line must gradually rise to the burner. It should not be higher than the burner. Avoid creating any high points in the line that will trap air bubbles.**

- The air supply must be capable of producing 2.0 CFM at 30 PSI.
- Install a shut off valve in the air supply line for service.
- **CAUTION** Install an air regulator with a gauge (capable of reading line pressure and set to 30 PSI) in the air supply line prior to the air regulator mounted on the furnace. The air supply regulator **is not supplied** with the furnace.
- If the air regulator does not have a filter with a bowl, a condensate drain leg must be installed in the air supply line.
- Install a quick disconnect at the air regulator on the furnace for service.
- For the ease of installation install a flexible airline (0.250 I.D. minimum) from the quick disconnect to the air regulator.
- The air supply line must be pitched uphill from the regulator to the furnace to prevent condensation from entering your burner.
- Close all air shutoff valves, set the air supply regulator to 30 PSI and the furnace air regulator to 12-16 PSI (running). **Make final setting with heater running.**

Example air pressure supply installation:

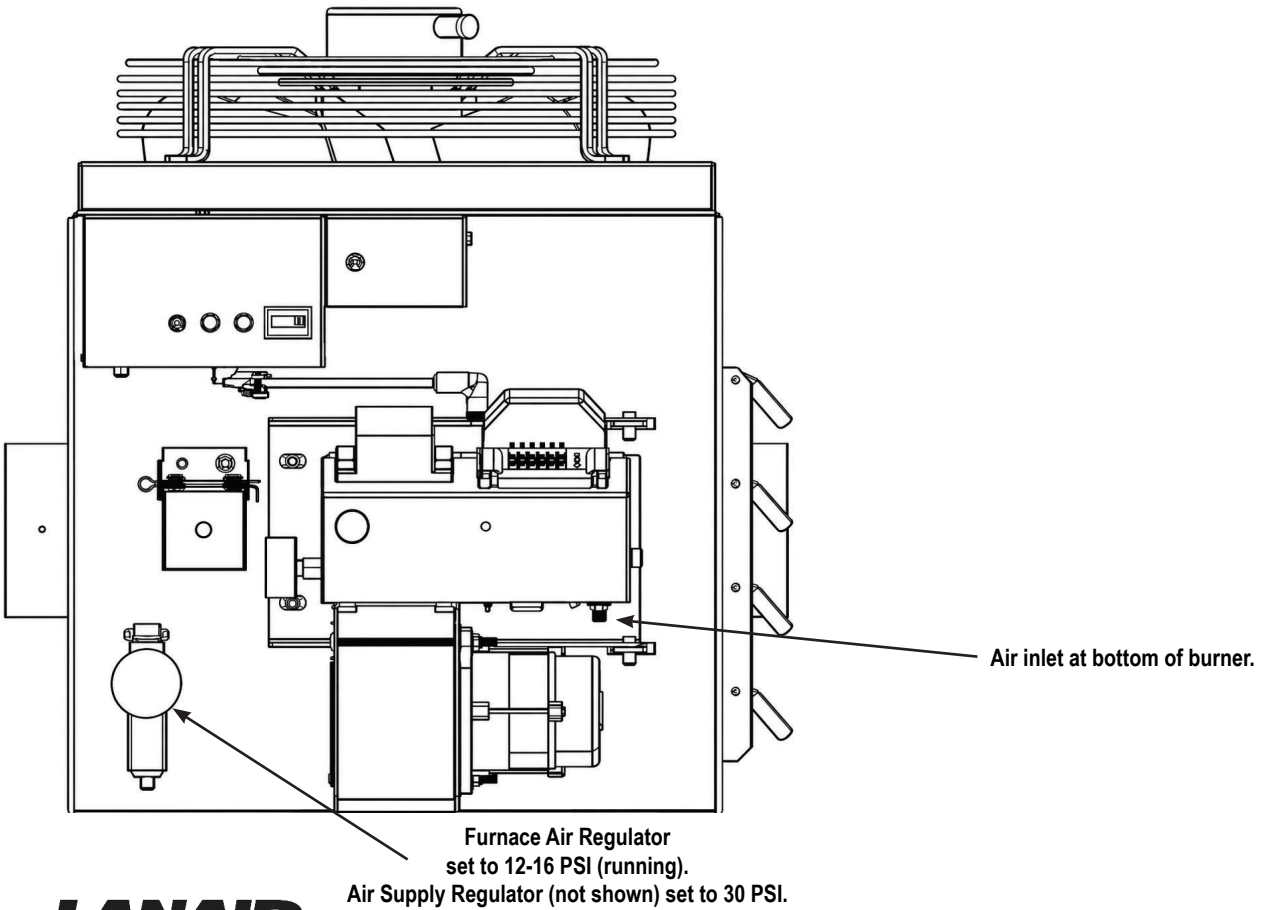

Placement Guide

It is important to plan the heater and tank placement, wiring, piping and chimney prior to installation.

Combustion and Make Up Air Requirements - It is necessary to ensure that adequate air for safe combustion is provided for oil-burning appliances and equipment. Refer to NFPA 31, chapter 5 for requirements based on the total BTU rating of all appliances in one space.

Tanks - The oil tank is to be vented to the exterior of the building. Oil temperature should be maintained at 50°F (10°C) and above. Tanks should be away from any source of heat and should not obstruct service meters, electrical panels, or shut off valves. Check building, environmental, and fire codes for containment and other restrictions.

Minimum Clearance - **⚠WARNING** Safe clearances to combustibles shall be adhered to. See your operating manual for more information.

Distance from Flammable Liquids - **⚠WARNING** Do not create a fire or explosion hazard by using or placing flammable liquids such as gasoline or solvents near the heater. A flammable liquid is any liquid that has a closed-cup flash point below 100°F (37.8°C), as determined by the test procedures and apparatus set forth in 1.7.4 of NFPA 30.

Access - Position the waste oil storage tank to provide adequate access to filling ports, filter, drain valve and pump. Leave an unobstructed path for shop vehicles and equipment. Consider access needed for service (heat exchanger cleaning, chimney cleaning, removal of chimney cap, burner, etc.). If desired, the heater can be wall mounted or hung from the ceiling at some distance from the oil tank.

Cabinet Orientation vs. Air Flow Direction - The Lanair waste oil heater is designed such that the louver and cabinet panels may be swapped, and the cabinet can be rotated 180º.

Install Guide

Installation				
Steps	**250-Gallon Tank-Mount**	**250-Gallon Wall-Mount**	**250-Gallon Ceiling-Mount**	**215-Gallon Retrofit Tank-Mount**
1	250-Gallon Tank Assembly	-	-	215-Gallon Tank Assembly
2	250-Gallon Tank-Mount Heater Support Assembly	Wall-Mount Heater Support Assembly	Ceiling-Mount Heater Support Assembly	215-Gallon Tank Heater Support Assembly
3	250-Gallon Tank Heater Assembly	Wall-Mount Heater Assembly	Ceiling-Mount Heater Assembly	215-Gallon Tank Heater Assembly
4	Burner Assembly	Burner Assembly	Burner Assembly	Burner Assembly
5	Side-Suction Pump Assembly	Top-Suction OR Side-Suction Pump Assembly	Top-Suction OR Side-Suction Pump Assembly	Retrofit Pump Assembly
6	Chimney Assembly	Chimney Assembly	Chimney Assembly	Chimney Assembly

250-Gallon Tank Assembly

- Move tank to the desired install location.
- Install 1/2” NPT plug in tank.

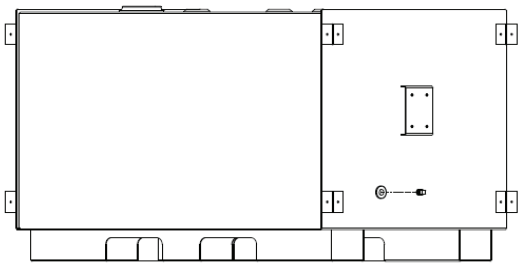

- USE PIPE DOPE Install 2” to 1/2” NPT reducer bushing, 1/2” NPT nipple, 1/2” NPT ball valve, and 1/2” NPT plug in tank.

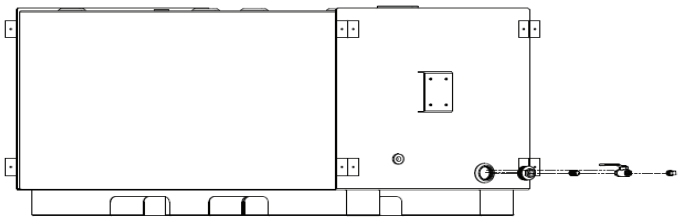

- Ensure all unused tank bungs are sealed before operating.

215-Gallon Tank Assembly

- Remove the existing pump assembly, fittings, pickup tube, filter, and all fuel related components prior to installing the retrofit kit. Discard removed components. Do not use any old components. **Failure to follow this step will result in a voided warranty.**
- If the 215-gallon tank is already assembled and positioned in the correct installation location, leave the tank fittings and strainer pans as they are. No changes to these components are required.
- Ensure all unused tank bungs are sealed before operating.

250-Gallon Tank-Mount Heater Support Assembly

- Locate the tank legs. Slide the tank legs into the tank leg brackets, then fasten the tank legs to the tank leg brackets with the provided anti-strip self-tapping tek screws.

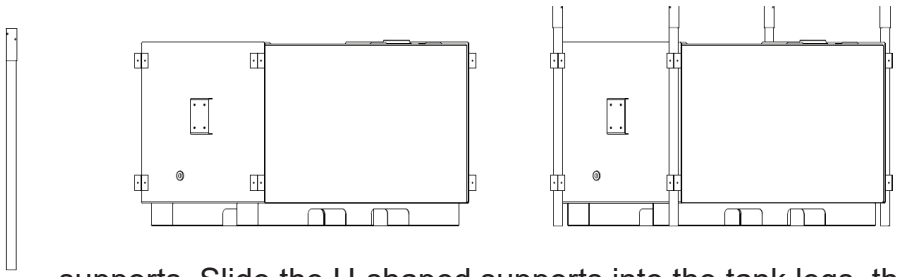

- Locate the U-shaped supports. Slide the U-shaped supports into the tank legs, then fasten with the provided anti-strip self-tapping tek screws.

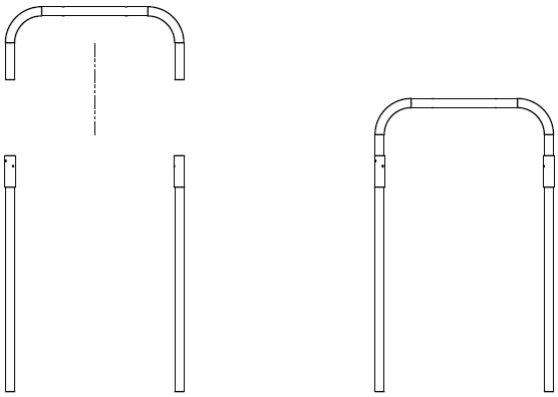

Wall-Mount Heater Support Assembly

- Fasten the Lanair wall mount brackets such that they are spaced to match the hole pattern on the bottom of the cabinet (about 58 and 13/16” apart). Hang the Lanair wall mount brackets directly to structural wall support only. If the wall does not have structural support in the location of the brackets, you may bridge across structural wall members using structural steel such as uni-strut and hang the brackets from the structural steel. The support structure must be strong enough to support the combined loads of heater assembly and the chimney structure. Check and level the brackets as necessary. Lanair recommends fastening the heater to the support bracket at eye level before moving the assembly onto the tank. **Ensure minimum clearances to combustibles are met.**

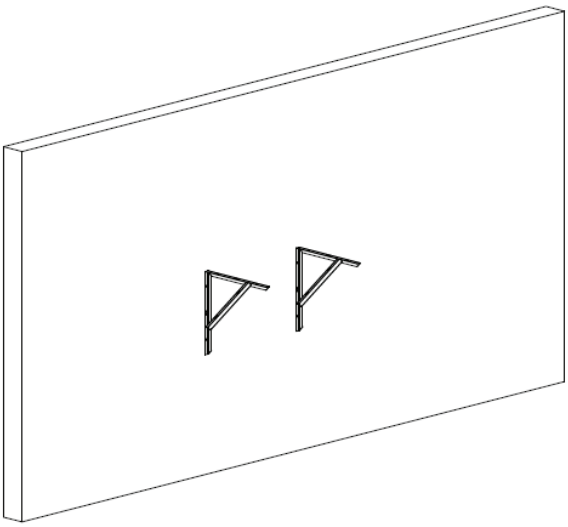

Ceiling-Mount Heater Support Assembly

- Fasten the heater to the support brackets using the provided washers, lock washers, and bolts (washer then lock washer then bolt).

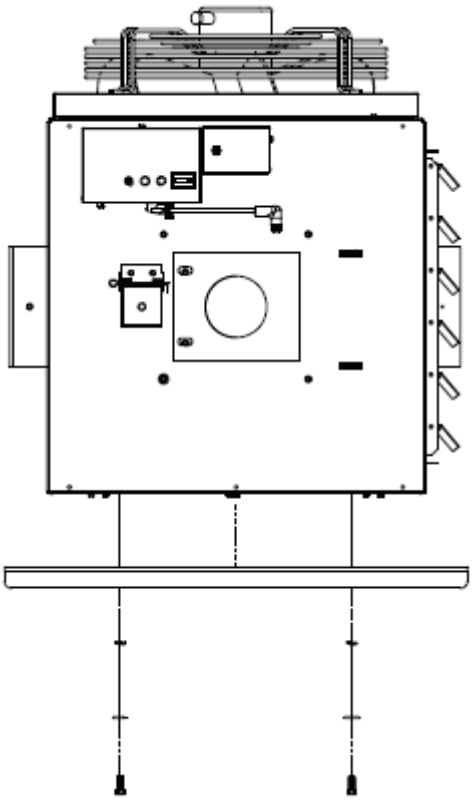

215-Gallon Tank Heater Support Assembly

- Using the components shown and the provided bolts, washers, lock washers, and flange nuts to fasten the 4 crossbars to the 2 support brackets as shown (bolt then washer then washer then lock washer then flange nut).

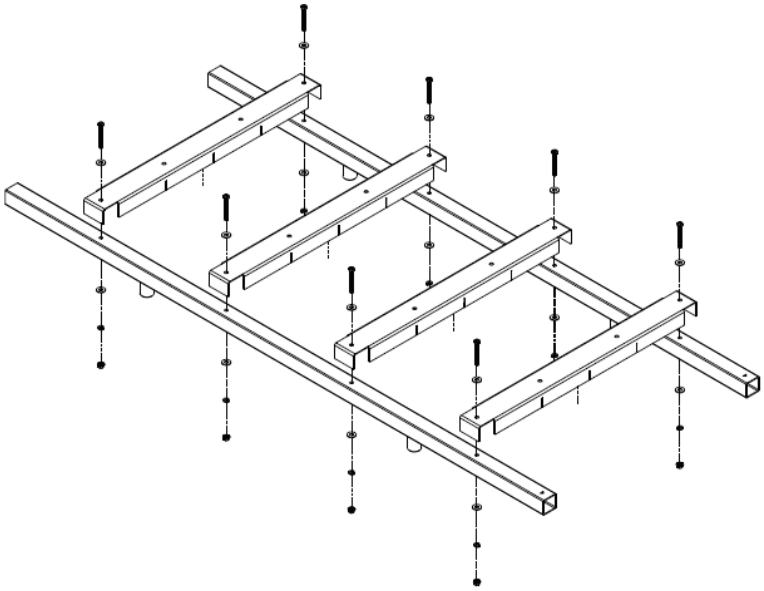

215-Gallon Tank Heater Support Assembly (cont.)

- Slide the assembled support bracket into the legs on the tank. Lanair recommends fastening the heater to the support bracket at eye level before moving the assembly onto the tank. **Ensure minimum clearances to combustibles are met.**

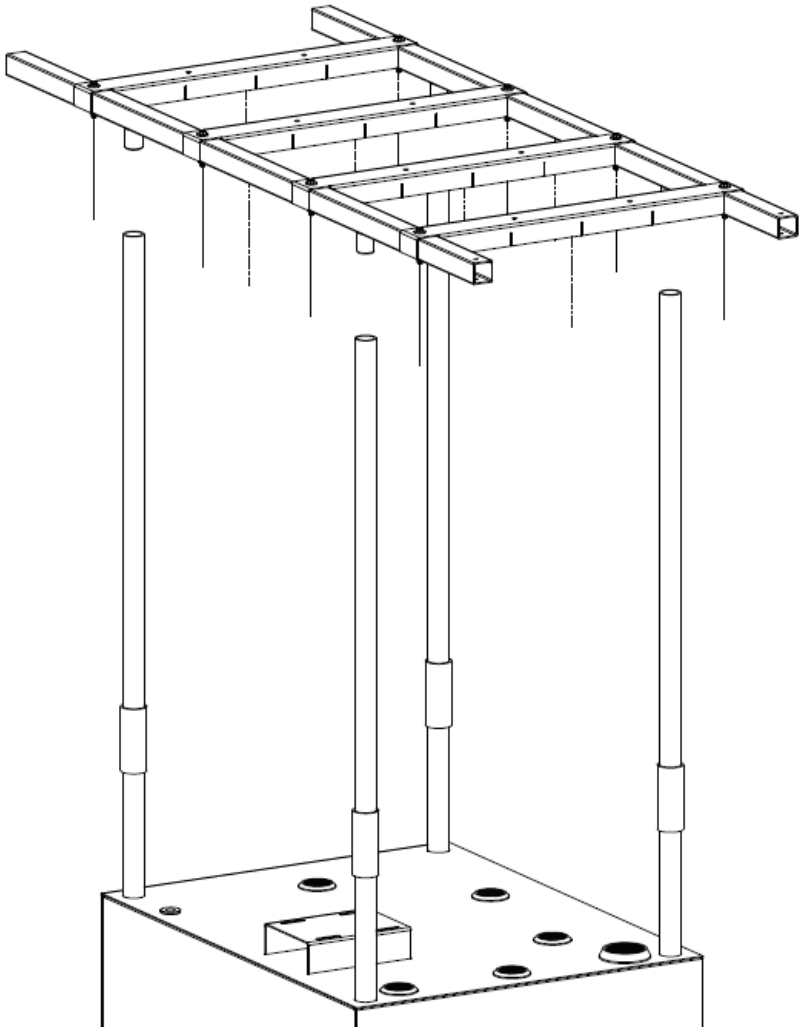

250-Gallon Tank Heater Assembly

- Fasten the heater to the U-shaped support brackets using the provided washers, lock washers, and bolts (washer then lock washer then bolt). Lanair recommends fastening the heater to the support bracket at eye level before moving the assembly onto the tank. **Ensure minimum clearances to combustibles are met.**

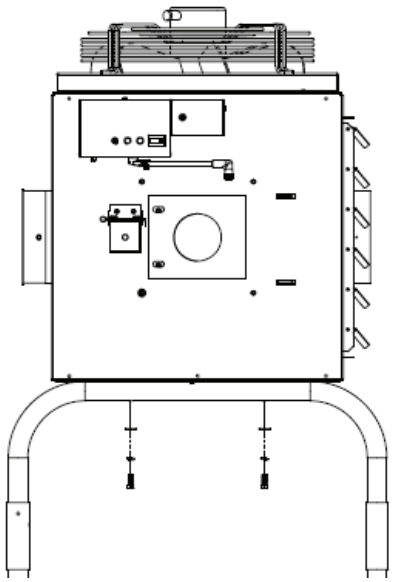

- Use a mechanical lifting aid (forklift/skid steer/etc.) to lift the heater onto the support brackets. Ensure that the mounting holes on the bottom of the heater line up with the mounting holes on the support brackets. Do not push or drag the heater. **⚠WARNING** Continue to support the cabinet with the lifting device until all cabinet and support stand hardware have been properly secured (**⚠WARNING** Maintain clearance to combustibles specified in your manual (refer to local codes and regulations).

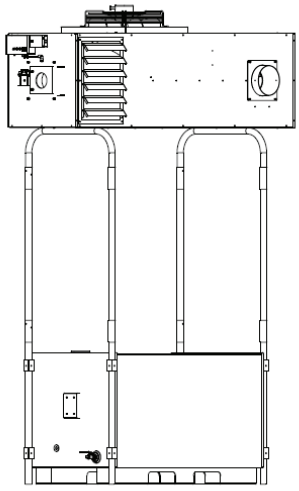

Wall-Mount Heater Assembly

- Use a mechanical lifting aid (forklift/skid steer/etc.) to lift the heater onto the support brackets. Ensure that the mounting holes on the bottom of the heater line up with the mounting holes on the support brackets. Do not push or drag the heater. **⚠WARNING** Continue to support the cabinet with the lifting device until all cabinet and support stand hardware have been properly secured (**⚠WARNING** Maintain clearance to combustibles specified in your manual (refer to local codes and regulations).

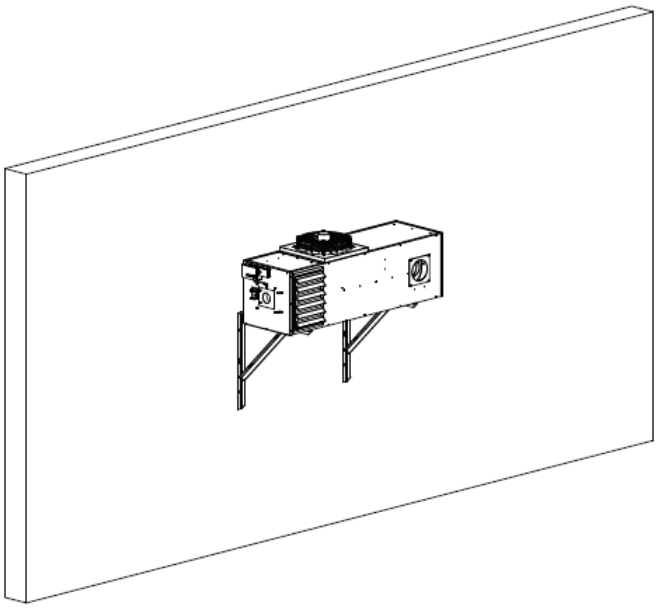

- Fasten the heater to the support brackets using the provided washers, lock washers, and bolts (washer then lock washer then bolt).

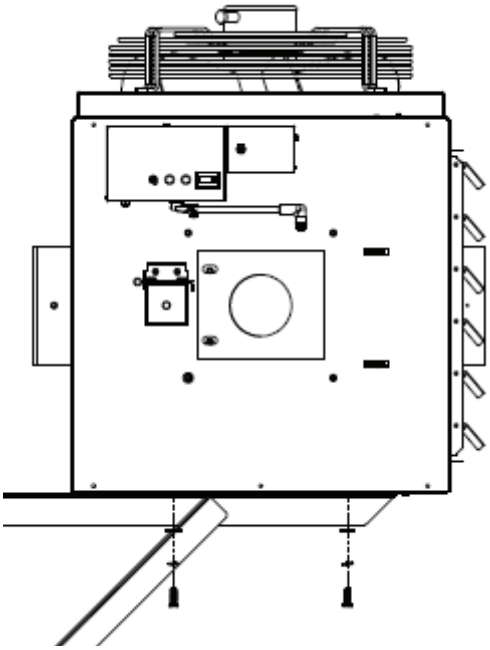

Ceiling-Mount Heater Assembly

Use a mechanical lifting aid (forklift/skid steer/etc.) to lift the heater. Do not push or drag the heater. **⚠ WARNING** Continue to support the cabinet with the lifting device until all cabinet and support hardware have been properly secured (**⚠ WARNING** Maintain clearance to combustibles specified in your manual (refer to local codes and regulations).

- Fasten threaded rod (4 pieces max diameter 5/8” (smaller diameter can use washers)) to ceiling support structures and support brackets. Check and level the brackets as necessary.

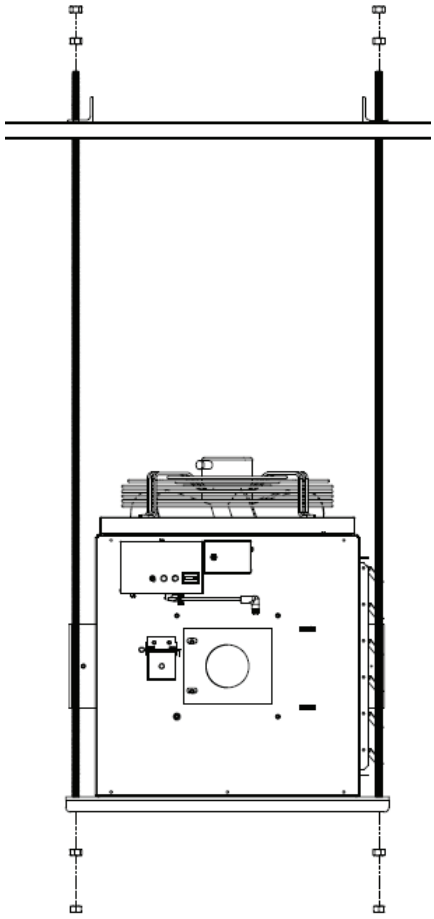

215-Gallon Tank Heater Assembly

Use a mechanical lifting aid (forklift/skid steer/etc.) to lift the heater. Do not push or drag the heater. **⚠ WARNING** Continue to support the cabinet with the lifting device until all cabinet and support hardware have been properly secured (**⚠ WARNING** Maintain clearance to combustibles specified in your manual (refer to local codes and regulations)).

- Fasten the heater to the support brackets using the provided washers, lock washers, and bolts (washer then lock washer then bolt).

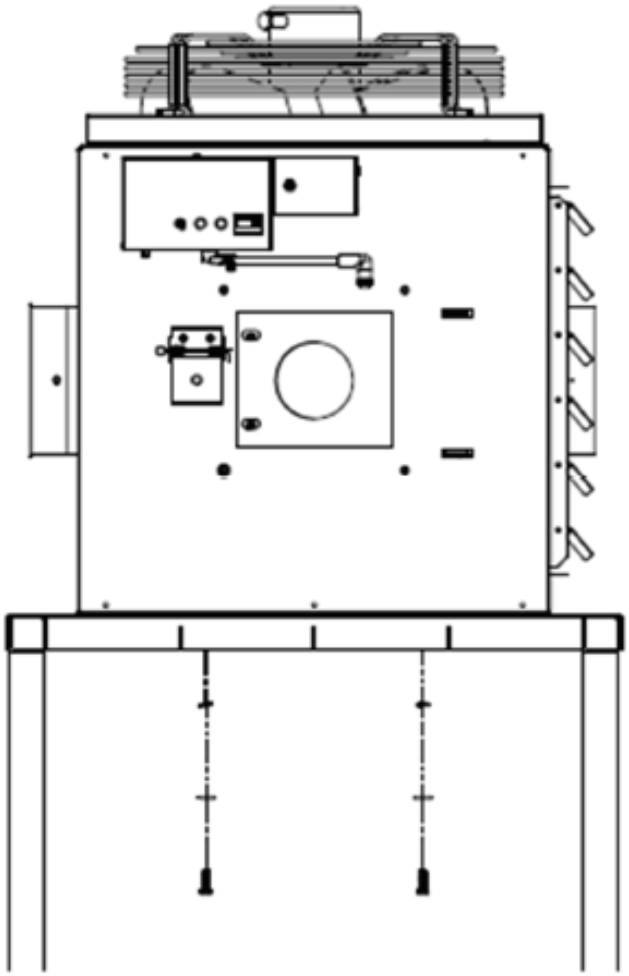

Burner Assembly

- Ensure the burner gasket is installed before attaching the burner to the heater.

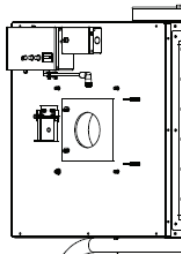

- Lower the burner mounting bracket's pegs into the chamber mounting bracket peg holes.

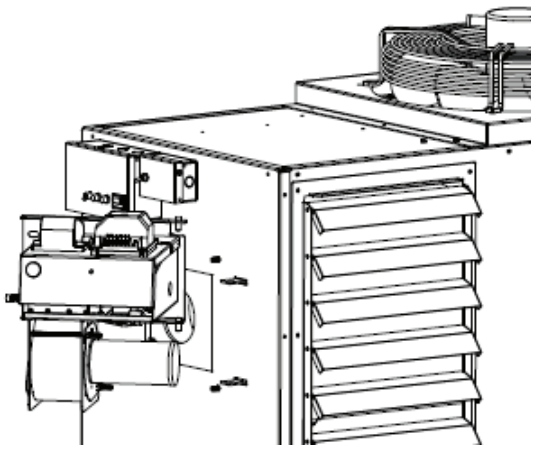

- Remove the washers and nuts installed on the burner mounting bolts, then use them to fasten the burner mounting bracket to the front of the chamber.

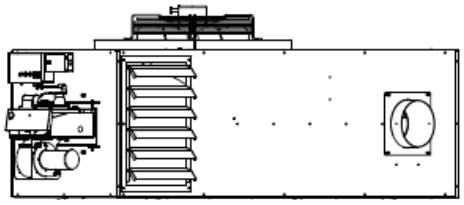

- USE PIPE DOPE Install the 1/4" NPT to 3/8" flare fitting on the burner's oil inlet.

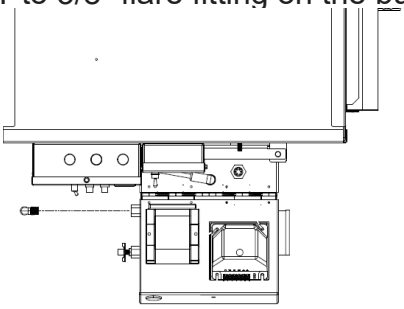

Side-Suction Pump Assembly

- USE PIPE DOPE Assemble the firestop valve fitting assembly. Thread together the 1/2” to 3/8” reducing nipple, 3/8” firestop valve, and 3/8” NPT to 1/4” NPT elbow.

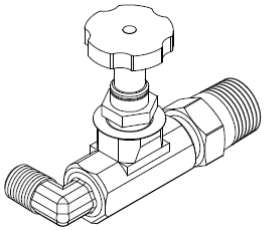

- USE PIPE DOPE Assemble the filter head fitting assembly. Thread together the filter head and the 1/4” NPT to 1/4” NPT elbow. **Ensure that the elbow and the filter head inlet are oriented as shown.**

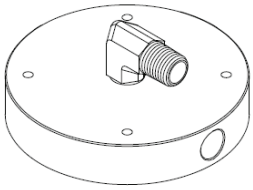

- USE PIPE DOPE Assemble the check valve fitting assembly. Thread together the check valve and the 1/4” NPT to 3/8” flare fitting.

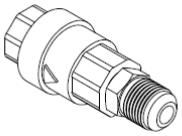

- USE PIPE DOPE Install 1/2” NPT to 3/8” flare fitting in the tank’s relief port.

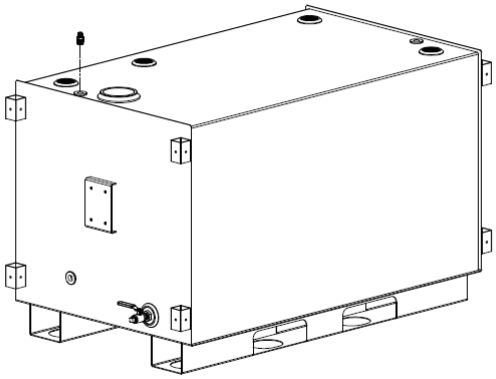

- USE PIPE DOPE Install the firestop valve fitting assembly in the tank.

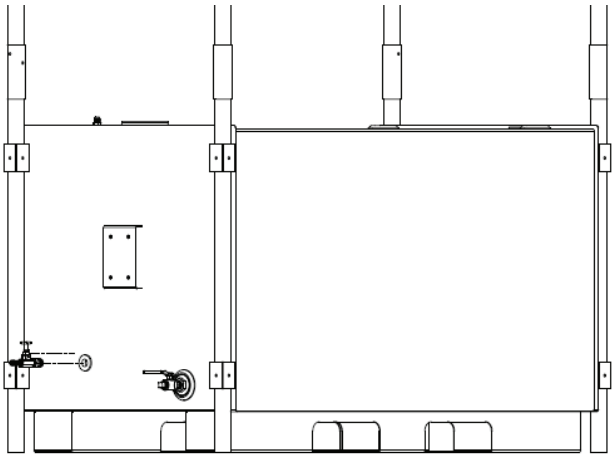

- USE PIPE DOPE Install the filter head assembly to the firestop valve assembly, then lube the O-ring on your filter, and spin it onto the filter head.

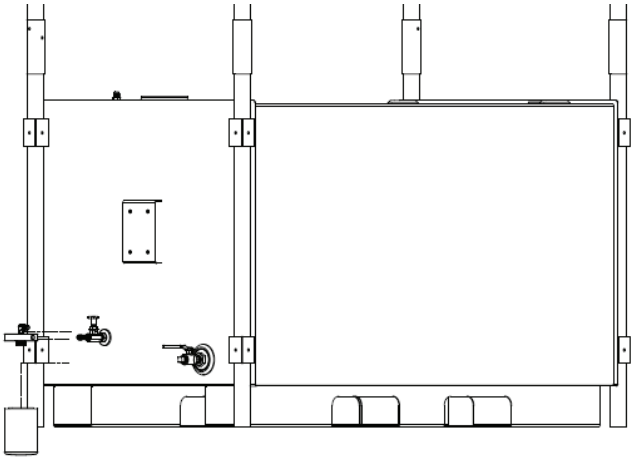

- USE PIPE DOPE Install the check valve assembly to the filter head assembly.

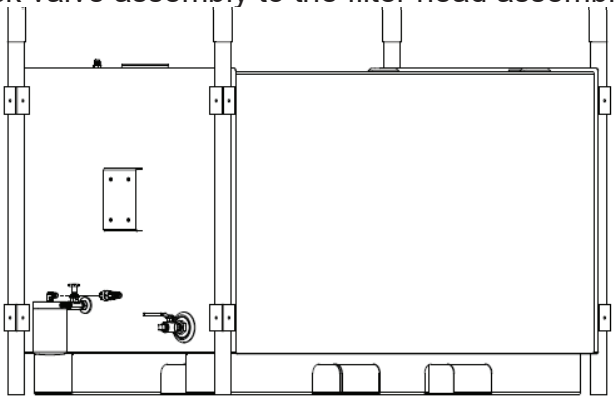

- With the pump motor cover removed, install the pump assembly on the tank bracket using the provided bolts.

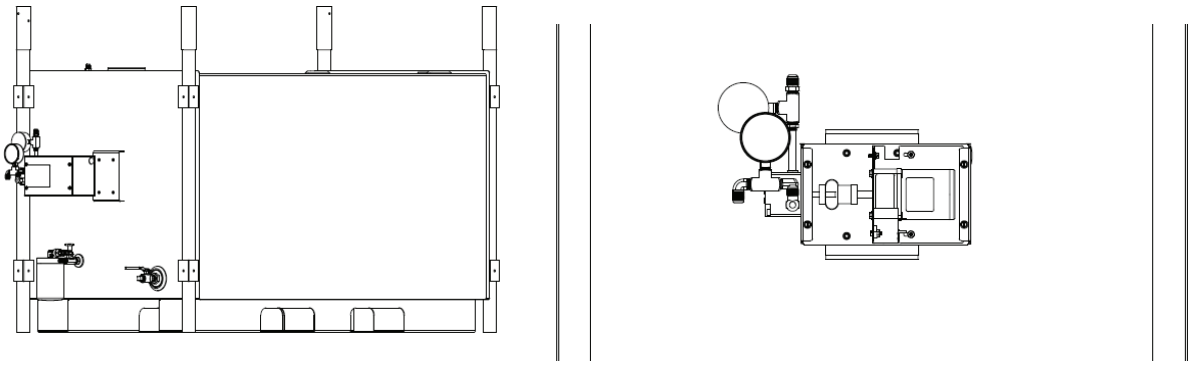

- Install pre-bent 3/8” copper line between the check valve fitting assembly’s outlet and the pump assembly’s suction inlet.

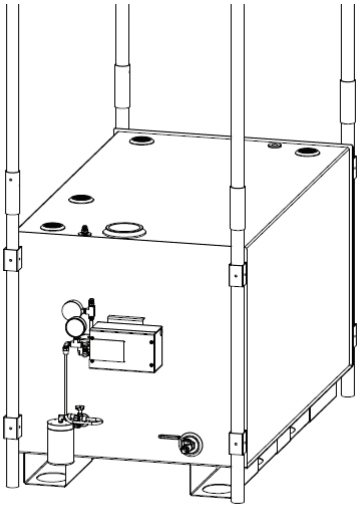

- Install pre-bent 3/8” copper line between the tank’s relief inlet and the pump assembly’s relief outlet.

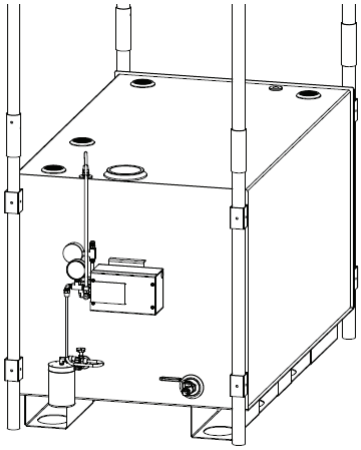

- Uncoil and install the 3/8” copper line between the burner’s oil inlet and the pump assembly’s pressure outlet.

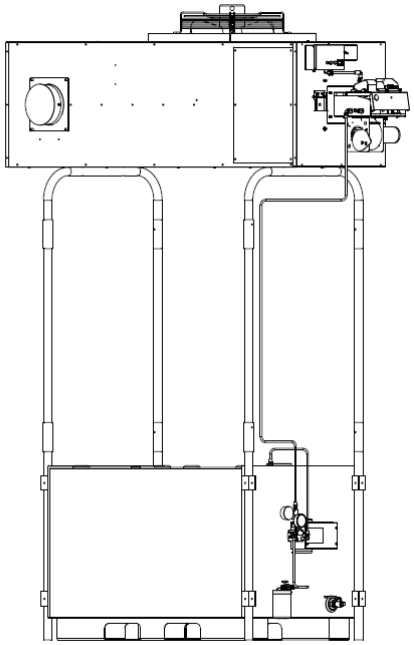

- With the pump motor cover removed, route the flexible metal conduit with white, purple, and green wires from the cabinet wiring box to the pump housing. Connect one end of the conduit to the pump housing (hole provided on both sides). Using the open lever nut terminals, connect the purple wire to the blue wire, the white wire to the red wire, and the green wire to the green wire. Connect the green wire to the ground screw on the middle housing bracket. Reinstall pump housing cover.

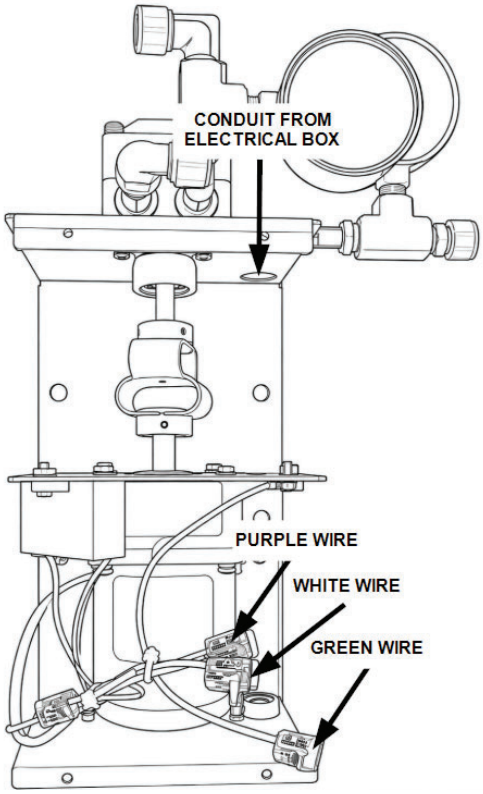

Top-Suction Pump Assembly

- Fasten the pump wall mount bracket to the wall above the fuel tank (wall mount bracket hardware not provided).

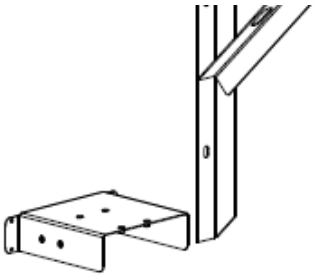

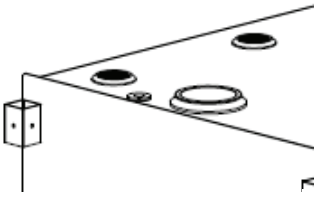

- With the pump motor cover removed, fasten the pump assembly to the pump wall mount bracket using the provided bolts. **OPTIONAL:** To rotate the pump 90°, remove nuts and star washers on pump motor bracket, pull motor and bracket backwards (leaving the coupler attached), then remove the screws fastening the pump. Rotate the pump 90°, then pump screws. Slide the pump motor bracket back to the OEM setting and reinstall the nuts and star washers.

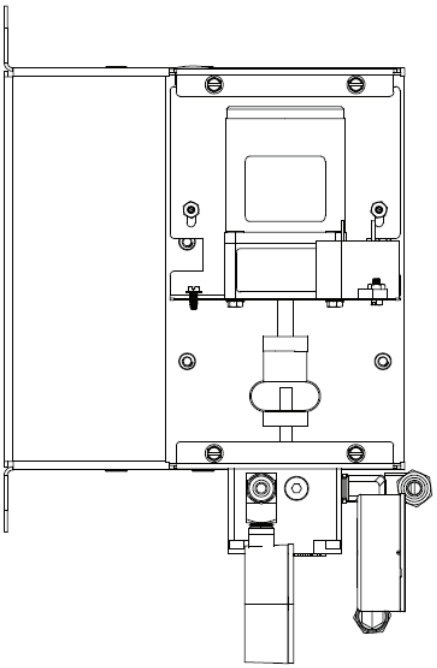

- Fasten the filter head mount bracket to the pump wall mount bracket using the provided washers and bolts.

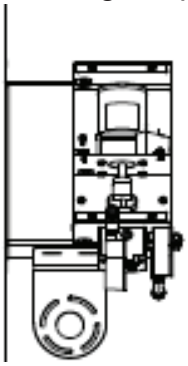

- Fasten the filter head to the filter head mount bracket using the provided screws and lock washers. Then, lube the O-ring on your filter, and spin it onto the filter head. **Ensure that the elbow and the filter head inlet are oriented as shown.**

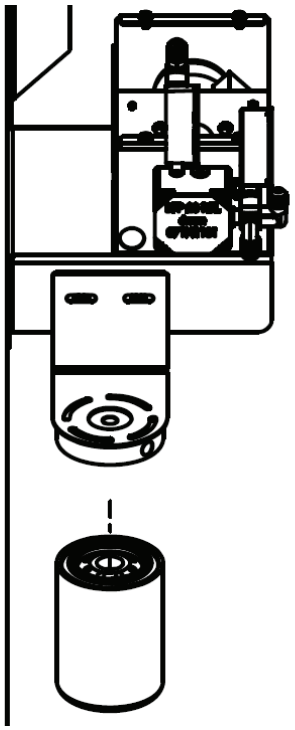

- USE PIPE DOPE Attach the 1/4” NPT to 3/8” flare elbow fitting to the filter head.

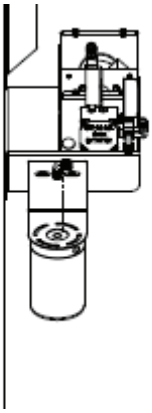

- USE PIPE DOPE Attach the 1/2” NPT to 1/4” NPT pipe reducer to the filter head.

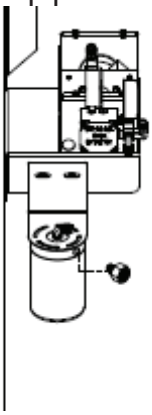

- USE PIPE DOPE Assemble the 1/2” NPT pipe cap, 1/2” NPT nipple, 1/2” NPT tee, 1/2” NPT pipe adapter, 1/2” NPT ball valve, and flare fitting. Then, attach to the assembly to the pipe reducer on the filter head. **Attach tee fitting first, then the cap/nipple and pipe adapter/ball valve/flare fitting.**

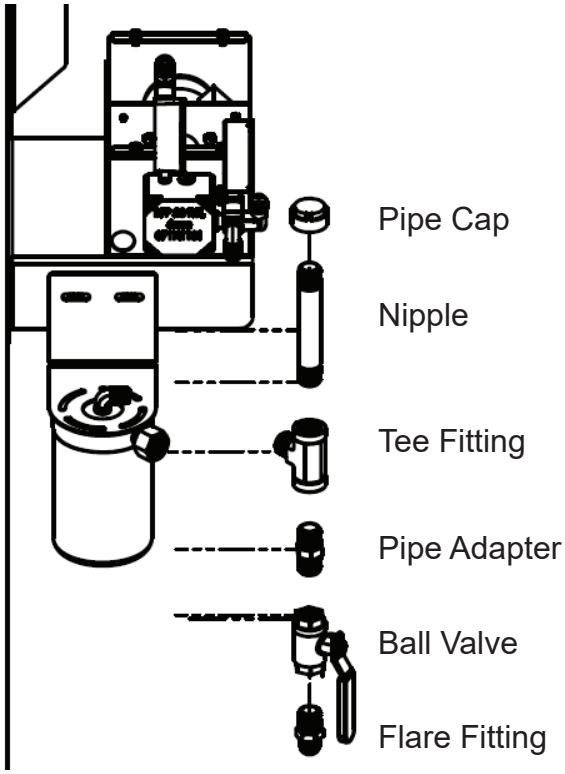

- USE PIPE DOPE On the tank side of your 1/2” flared copper fuel line, attach the flare fitting, the ½” NPT street elbow, the check valve, and strainer as shown.

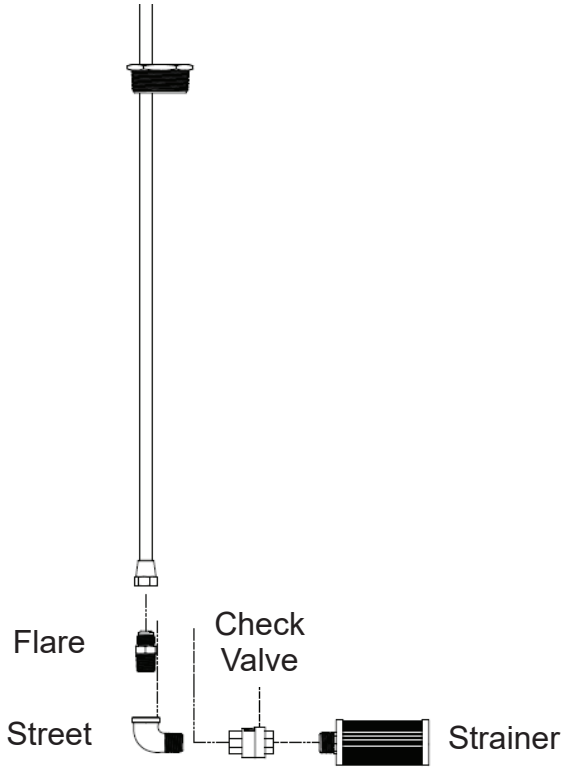

- Uncoil the 1/2” copper line and attach to the fitting assembly attached to your filter head as shown. **The strainer must be a minimum of 6” above the tank bottom.** Tighten the compression fitting on the tank bushing after position is set.

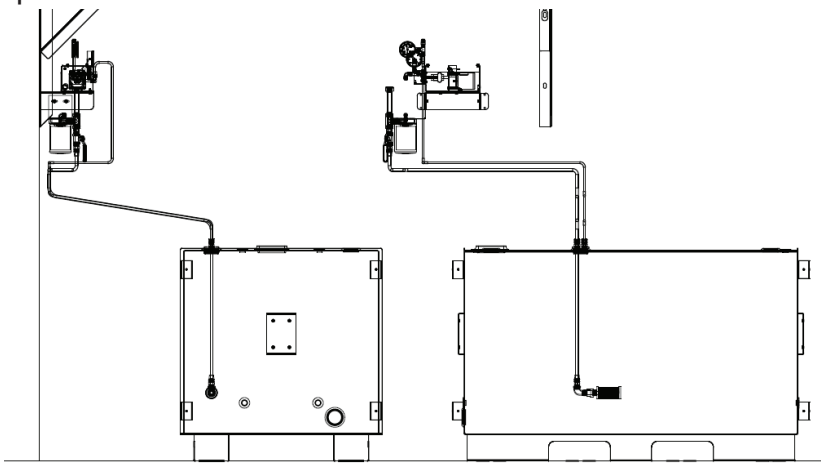

- Uncoil the 3/8” copper line with one flared end and attach to the pump’s return outlet as shown. Tighten the compression fitting on the tank bushing after position is set.

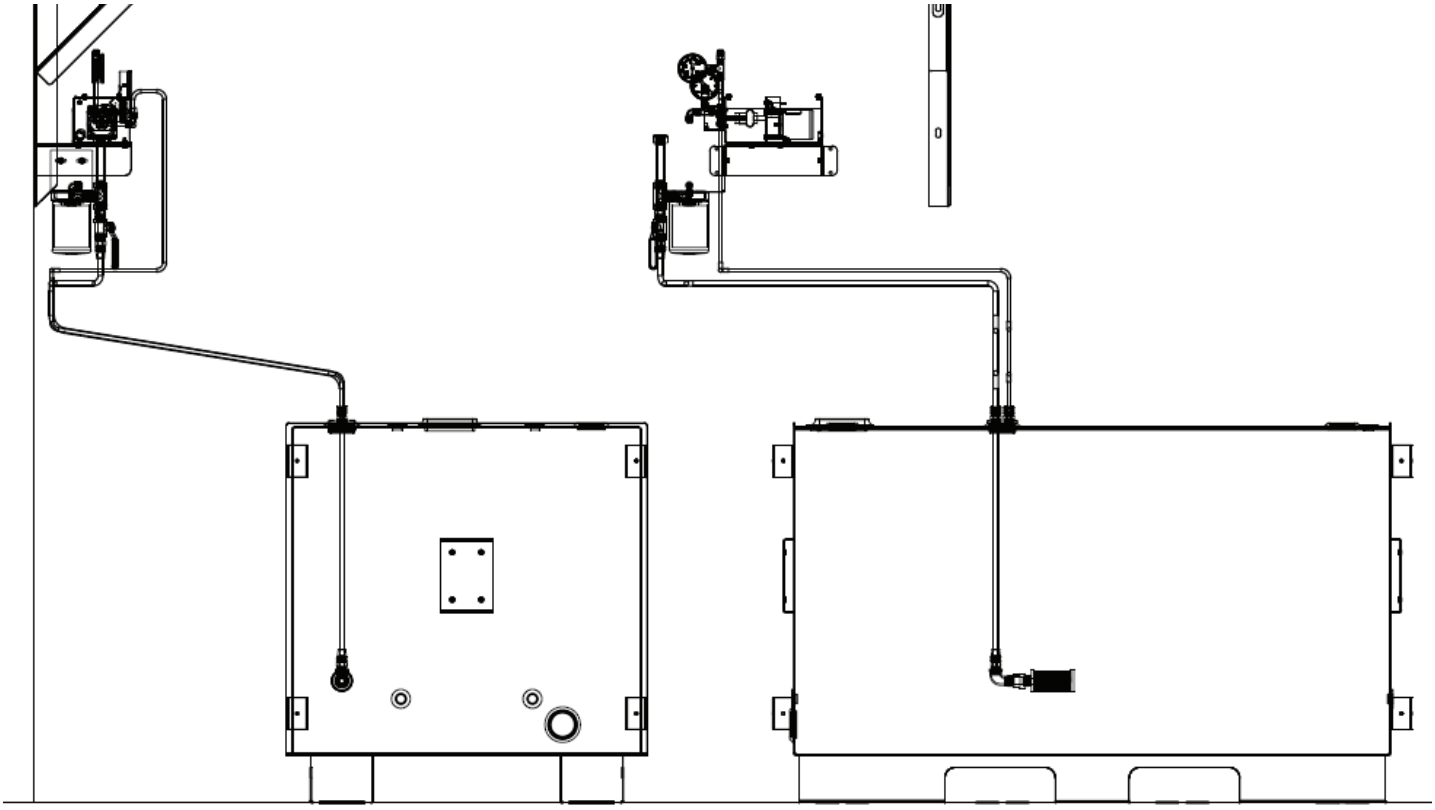

- Attach the pre-bent 3/8” copper line to the flare fitting on the filter head’s outlet and the pump’s inlet.

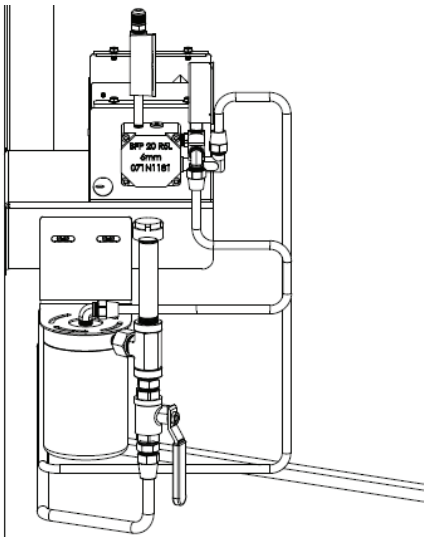

- Uncoil the 3/8” copper line with two flared ends and attach to the burner’s fuel inlet as shown.

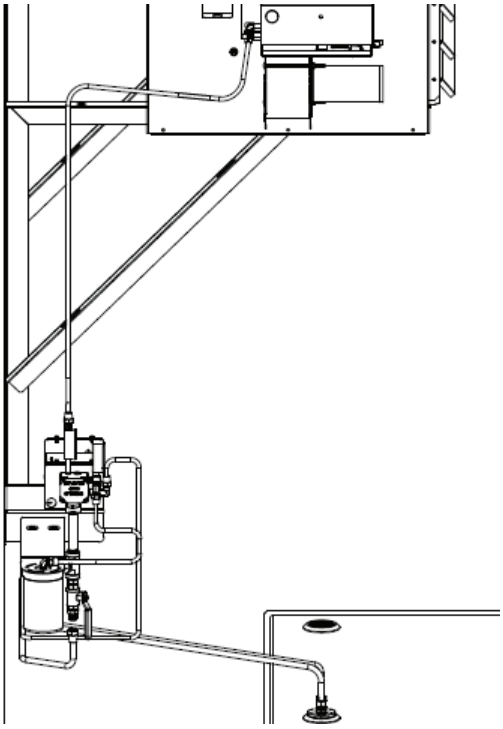

- With the pump motor cover removed, route the flexible metal conduit with white, purple, and green wires from the cabinet wiring box to the pump housing. Connect one end of the conduit to the pump housing (hole provided on both sides). Using the open lever nut terminals, connect the purple wire to the blue wire, the white wire to the red wire, and the green wire to the green wire. Connect the green wire to the ground screw on the middle housing bracket. Reinstall pump housing cover.

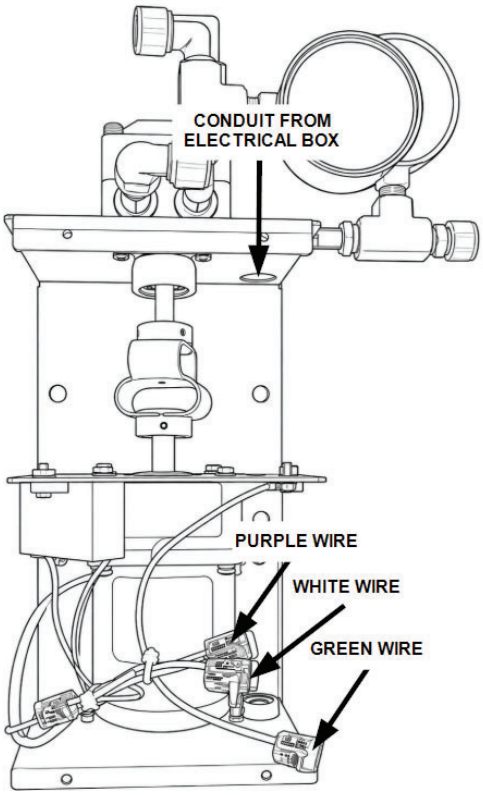

Retrofit Pump Assembly

- USE PIPE DOPE Assemble the pickup tube using the strainer, tube with bushing, 1/2” NPT street elbow, check valve, 1/2” NPT tee, 1/2” NPT nipple, 1/2” NPT pipe cap, 1/2” NPT to 1/4” NPT adapter, and 1/4” NPT nipple.

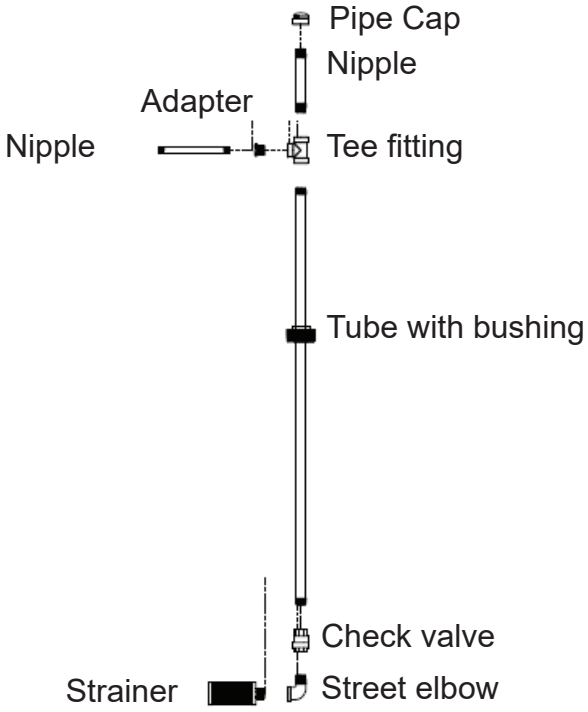

- USE PIPE DOPE Assemble tank and pickup tube.

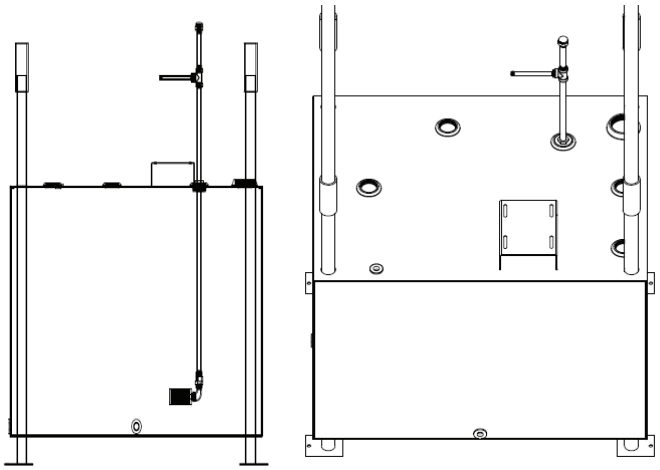

- USE PIPE DOPE Assemble the filter head fitting assembly. Thread together the filter head and the 1/4” NPT to 3/8” flare elbow. **Ensure that the elbow and the filter head inlet are oriented as shown.**

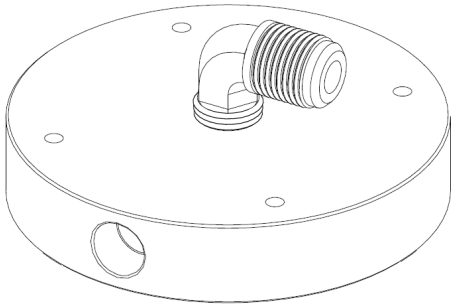

- Assemble filter head and pickup tube assembly, then lube the O-ring on your filter, and spin it onto the filter head.

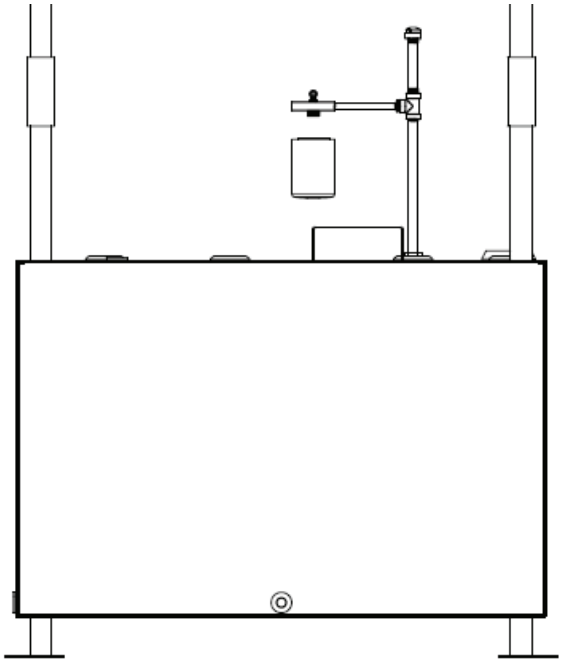

- With the pump motor cover removed, fasten the pump assembly to the pump mount bracket using the provided bolts.

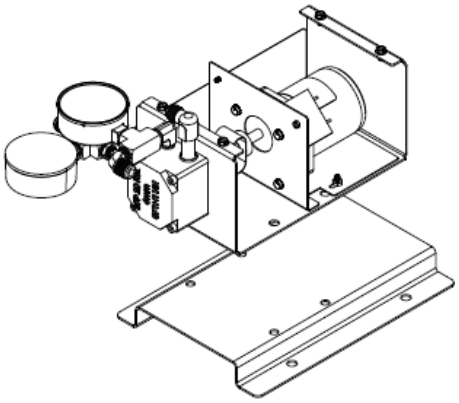

- Fasten the pump assembly and pump mount bracket to the tank.

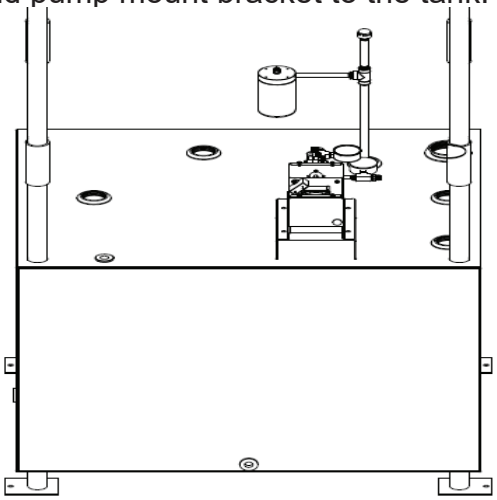

- USE PIPE DOPE Assemble the street elbow and 1/2” NPT to 3/8” flare fitting.



- USE PIPE DOPE Thread the street elbow and flare fitting assembly into the tank relief port.

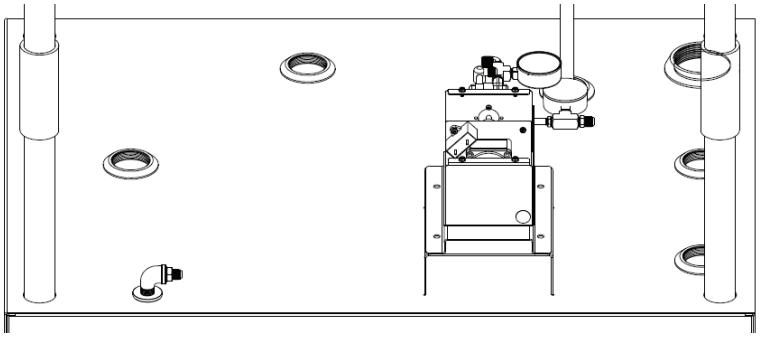

- Attach the pre-bent 3/8” copper line to the pump relief outlet and the tank relief inlet.

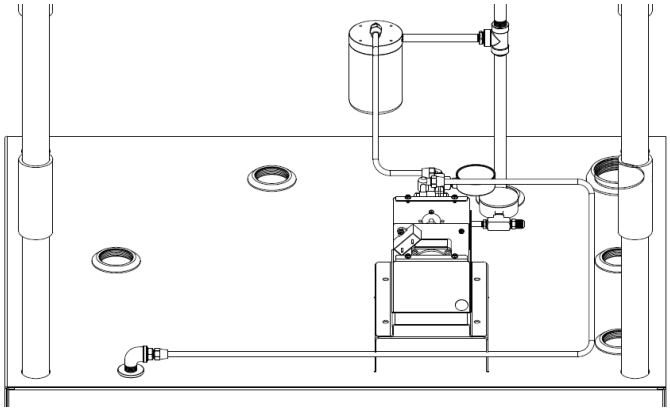

- Attach the pre-bent 3/8” copper line to the filter outlet and the pump inlet.

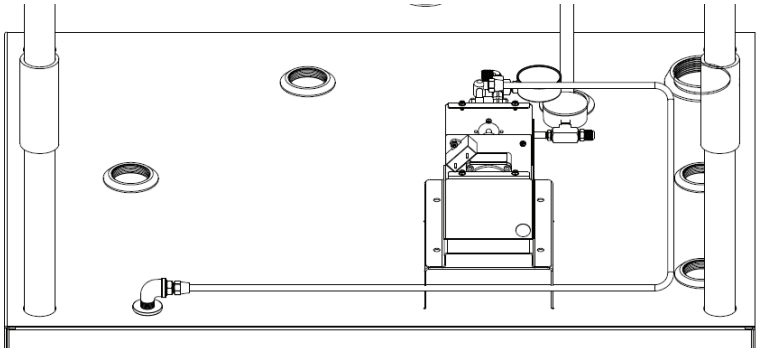

- Uncoil the 3/8” copper line with two flared ends to the pump outlet and the burner inlet.

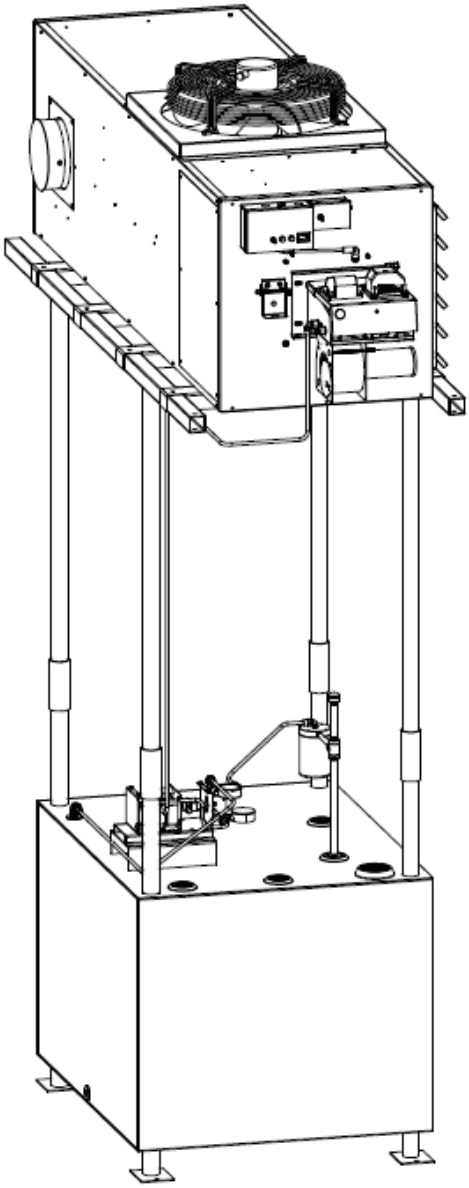

- With the pump motor cover removed, route the flexible metal conduit with white, purple, and green wires from the cabinet wiring box to the pump housing. Connect one end of the conduit to the pump housing (hole provided on both sides). Using the open lever nut terminals, connect the purple wire to the blue wire, the white wire to the red wire, and the green wire to the green wire. Connect the green wire to the ground screw on the middle housing bracket. Reinstall pump housing cover.

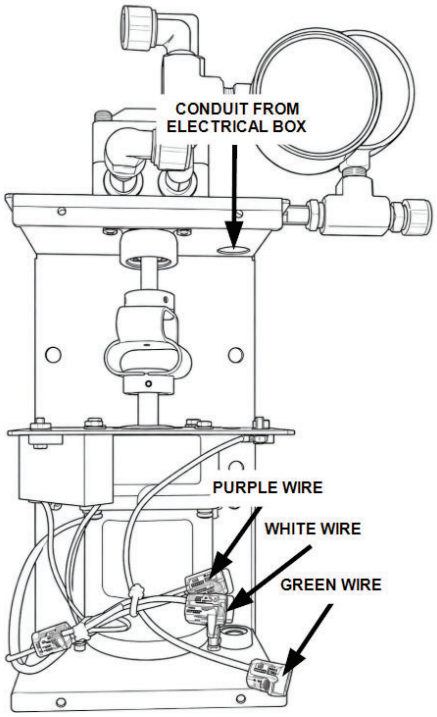

Chimney Assembly

The exhaust system is critical for the safe operation of the heater, as it exhausts the products of combustion out of the building to the ambient environment. Use the Lanair chimney configuration tool to build the proper chimney assembly for your installation. Scan the QR code below.

NOTES:

⚠ WARNING

WARNING: HAZARD OF ELECTRICAL SHOCK!

Electrical & Wiring Diagrams

- All wiring must comply with the National Electrical Code, state and local ordinances, and be wired by a qualified electrician.
- **Electrical service MUST be connected to a separate 20 AMP, 115 VAC, 60 HZ single phase circuit.**
- **A 30 Amp breaker may be necessary depending on heater size, pump selection and if using the optional compressor. A qualified electrician should confirm breaker and wire sizes in accordance with all applicable electrical codes.**
- **To remove wires from the block, push down on the button above the wire termination. Once fully depressed, remove wire. Fully depress to reinstall wire.**
- Electrical service connections are made in the electrical junction box on the side of the heater.
- The heater must have a safety equipment ground from the main electrical service, stranded 12 AWG minimum.
- The electrical conductors for electrical service to the heater MUST be stranded 12 AWG minimum.
- Install a manual service disconnect near the heater, and label it.
- The supply voltage must be maintained at a minimum 110 VAC.
- The electrical conductors from the main electrical service must be within approved conduit.
- Keep all electrical conductors and conduit away from the chimney connector as well as any other hot surfaces. Keep the power off until the heater is ready to be started.

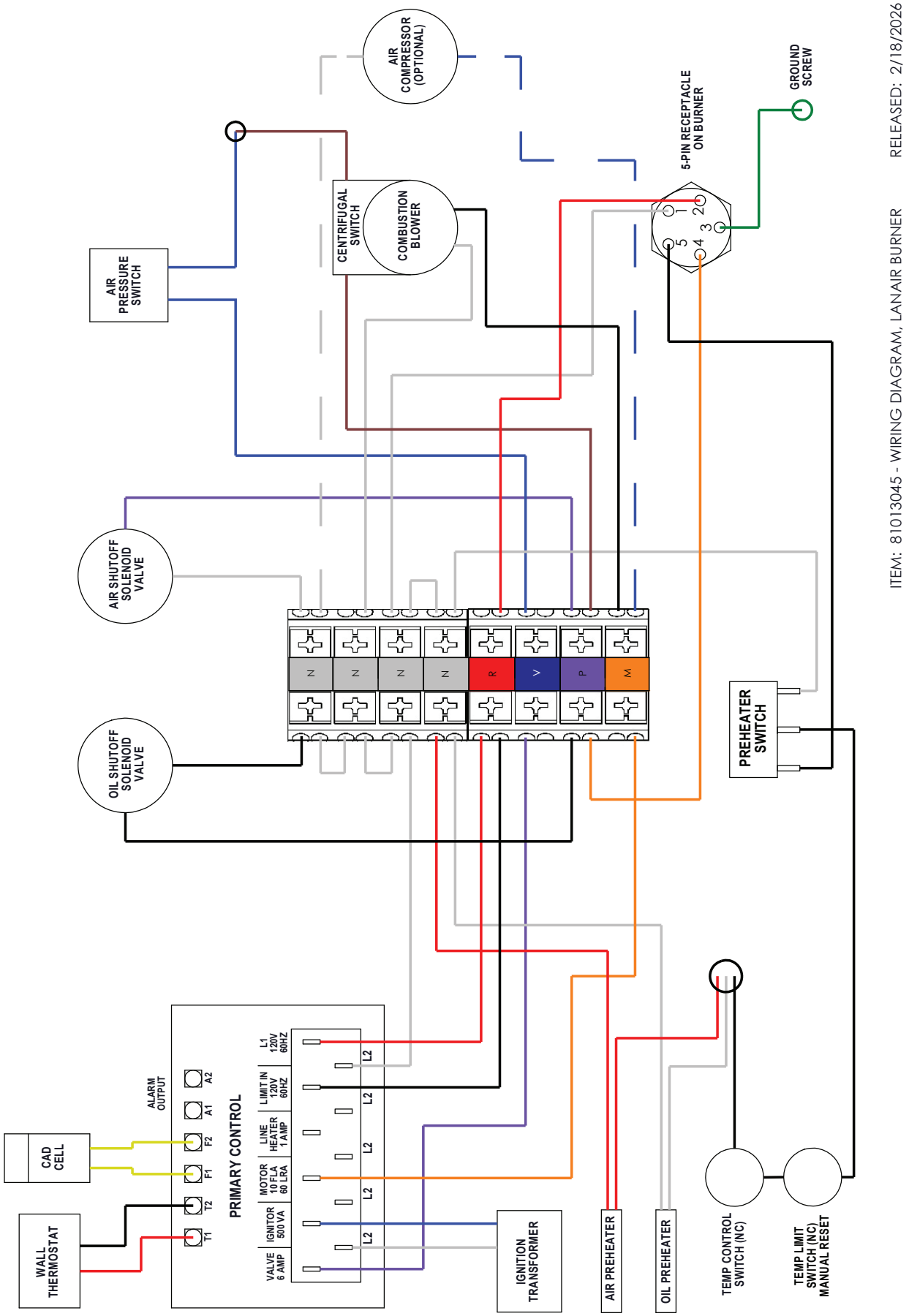
AIR COMPRESSOR (OPTIONAL)
GROUND SCREW
5-PIN RECEPTACLE ON BURNER
CENTRIFUGAL SWITCH
COMBUSTION BLOWER
AIR PRESSURE SWITCH
AIR SHUTOFF SOLENOID VALVE
OIL SHUTOFF SOLENOID VALVE
PREHEATER SWITCH
N
N
N
N
R
V
P
M
ITEM: 81013045 - WIRING DIAGRAM, LANAIR BURNER
RELEASED: 2/18/2026
CAD CELL
WALL THERMOSTAT
ALARM OUTPUT
A2
A1
F2
F1
T2
T1
PRIMARY CONTROL
L1 120V 60HZ
LIMIT IN 120V 60HZ
LINE HEATER 1 AMP
MOTOR 10 FLA 60 LRA
IGNITOR 500 VA
VALVE 6 AMP
L2
L2
L2
L2
L2
IGNITION TRANSFORMER
AIR PREHEATER
OIL PREHEATER
TEMP CONTROL SWITCH (NC)
TEMP LIMIT SWITCH (NC) MANUAL RESET

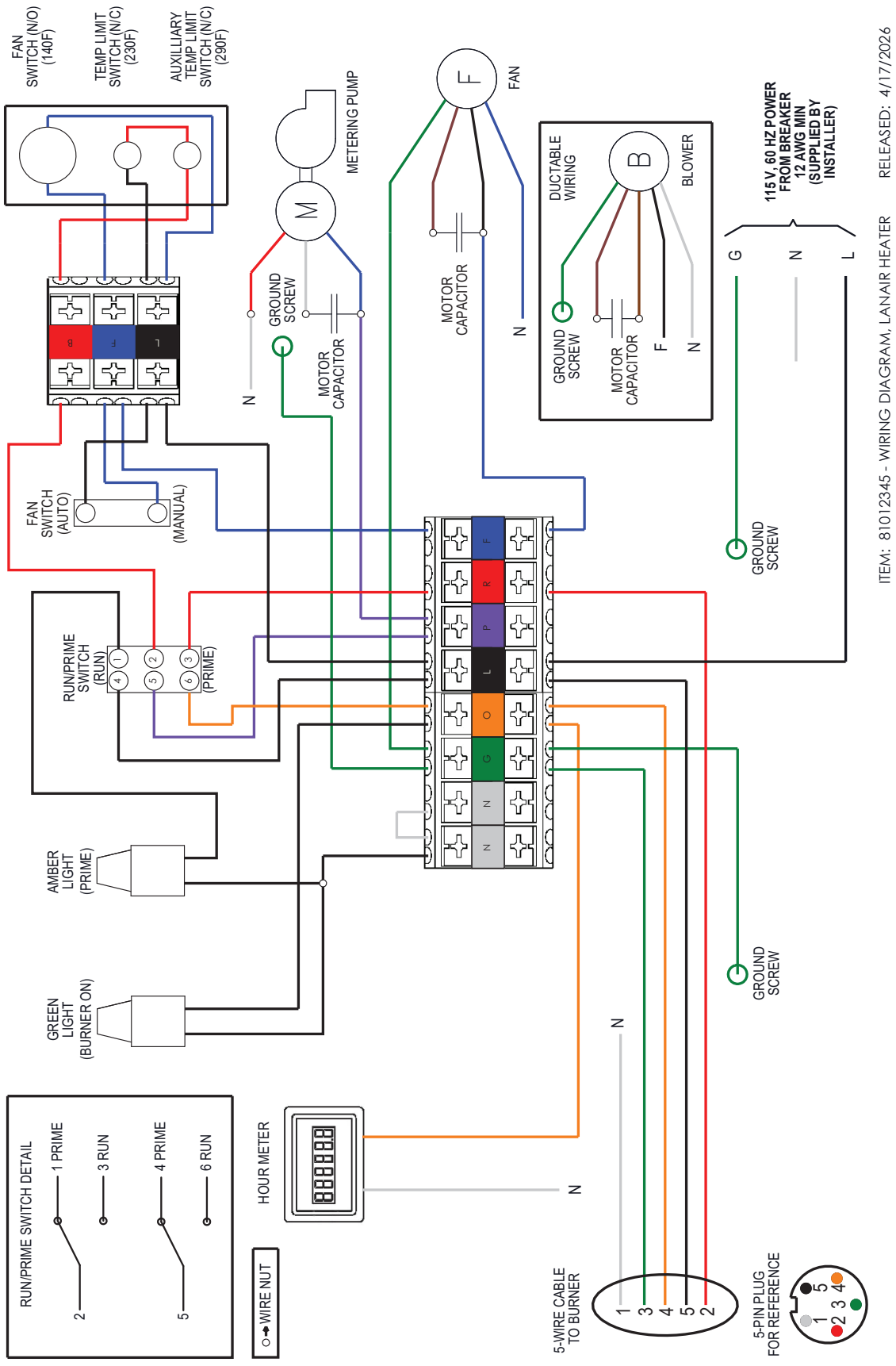
FAN SWITCH (N/O) (140F)
TEMP LIMIT SWITCH (N/C) (230F)
AUXILLIARY TEMP LIMIT SWITCH (N/C) (290F)
METERING PUMP
FAN
DUCTABLE WIRING
BLOWER
115 V, 60 HZ POWER FROM BREAKER 12 AWG MIN (SUPPLIED BY INSTALLER)
GROUND SCREW
MOTOR CAPACITOR
FAN SWITCH (AUTO)
(MANUAL)
RUN/PRIME SWITCH (RUN)
(PRIME)
AMBER LIGHT (PRIME)
GREEN LIGHT (BURNER ON)
HOUR METER
RUN/PRIME SWITCH DETAIL
1 PRIME
3 RUN
4 PRIME
6 RUN
WIRE NUT
5-WIRE CABLE TO BURNER
5-PIN PLUG FOR REFERENCE
ITEM: 81012345 - WIRING DIAGRAM, LANAIR HEATER
RELEASED: 4/17/2026

⚠ WARNING

! WARNING: HAZARD OF ELECTRICAL SHOCK!

Fuel Supply Pump Electrical Requirements

- All wiring must comply with the National Electrical Code, state and local ordinances, and be wired by a qualified electrician.
- The electrical conductors to the fuel pump motor MUST be stranded 18 AWG minimum.
- The electrical service connections for the fuel pump motor are made in the electrical junction box on the side of the heater.
- The pump motor MUST have a safety equipment ground from the main electrical service, stranded 18 AWG minimum.
- The electrical conductors from the electrical junction box to the pump motor must be within approved conduit.
- Keep all electrical conductors and conduit away from the chimney connector as well as any other hot surfaces. Refer to Wiring Diagram for color code, etc. Connect wiring to the L1 and L2 terminals of the fuel pump, but do not turn the power on until the heater is ready to be started.

Room Thermostat Requirements

- All wiring must comply with the National Electrical Code, state and local ordinances, and be wired by a qualified electrician.
- Install the room thermostat in accordance with the directions furnished with the thermostat.
- Use two conductor thermostat wire (24 AWG minimum) for the connection of the thermostat to the T1-T2 terminals of the oil primary control that is mounted on top of the burner. Orientation does not matter.
- Mount the thermostat 5 feet above the floor on an inside wall away from the heater's warm air path. Be sure to avoid doorways, windows, breezeways and sunshine.
- The electrical current for the thermostat is 24 volts AC, and is provided by the oil primary control.
- Keep the thermostat wire away from the chimney connector, or any other hot surfaces.

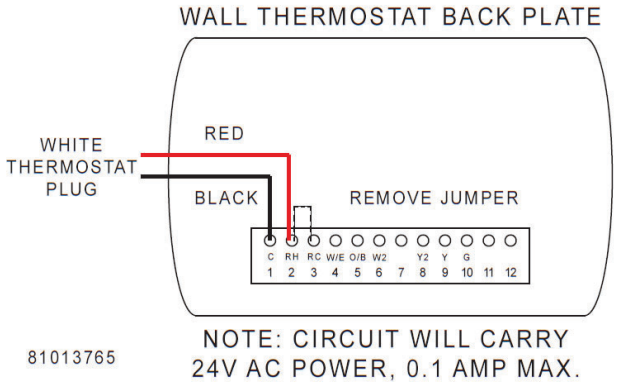

Fuel Pump Priming

- The fuel level in the supply tank must be above the fuel outlet on the tank.
- Fill tank with clean used oil. Securely replace the cap.
- Position a container below bleed valve on preheater inlet and open the valve. Close valve 30 seconds after achieving a consistent stream of oil with no air bubbles.
- Toggle the priming switch to the “PRIME” position.
- Observe the end of the fuel supply line that is disconnected from the burner. Allow a steady stream (no air bubbles) of fuel to flow into the container for several minutes. This will flush any debris from the fuel line that could potentially plug the nozzle. The vacuum gauge reading should not exceed 5” HG of vacuum.
- Toggle the priming switch to the “RUN” position. The green light will not illuminate until 15 seconds after the thermostat call for heat.
- Reconnect the fuel supply line to the burner. The burner should now be ready for normal operation.

NOTE: Filling Strainer and pickup tube can help speed up priming for top-suction applications.

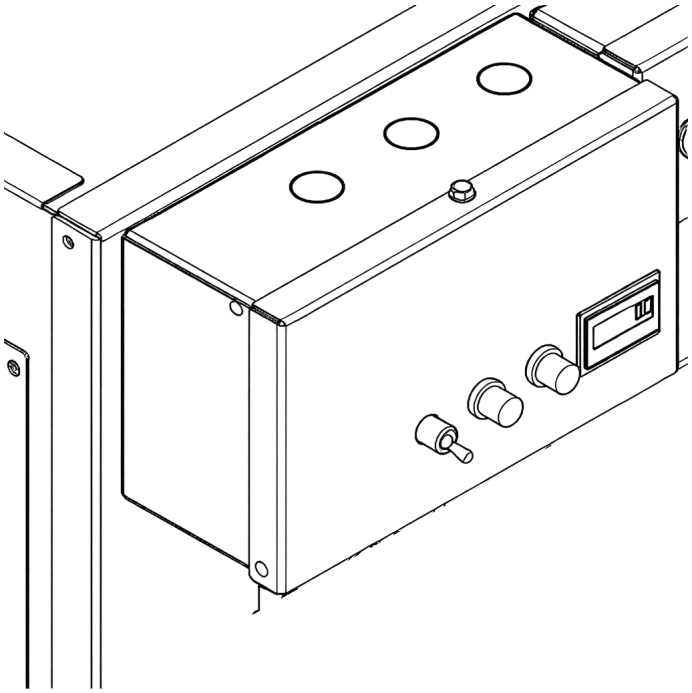

Burner Startup Procedure

- Make sure the main electrical service for the heater is turned off and locked out.
- Check for proper draft in the chimney. Confirm that there is no positive draft pressure (air coming DOWN the chimney, usually caused by roof vent exhaust fans).
- Make sure there is air pressure at the heater is set to 12-16 PSI (running) and the air supply regulator is set to 30 PSI.
- Ensure that the fan/limit control switch is set to automatic.
- Set the room thermostat below room temperature (off).
- Turn the main electrical service on.
- If using waste used oil, flip the preheater rocker switch on, light on, and wait 5-7 minutes for the preheater assembly to reach operating temperature. Leave the preheater switch off if using No. 2 fuel oil.
- Set the combustion air baffle position according to your unit.

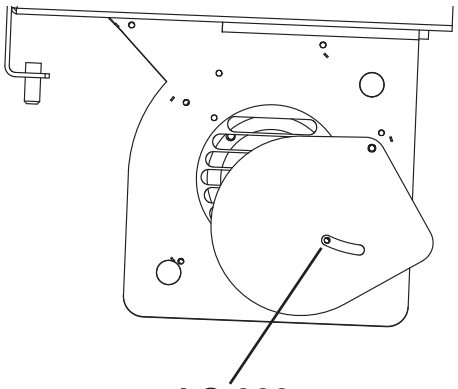

LS-300

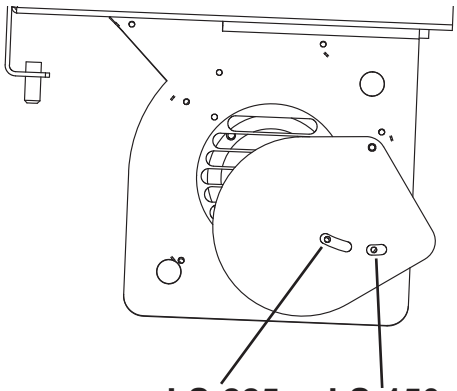

LS-225 **LS-150**

These are preliminary positions for the air baffle and may be adjusted during a later step.

NOTE: LS-150 USERS NEED TO SWITCH FROM THE LS-225 TO THE LS-150 POSITION.

- Turn the room thermostat up above the room temperature. The burner will now fire. Check the sight glass on the rear of the burner. Also inspect the flame through the inspection port.
- Check for 12-16 PSI (running) on the regulator at the heater (provided) and 30 PSI on the air supply regulator (not provided) is the starting point, you may need to adjust from there when **VISUALLY SETTING THE FLAME**.

CAUTION

See Flame Adjustment. Periodically examine flame and adjust if needed.

- Adjust the barometric damper to obtain a draft of -0.05 W.C. while the heater is hot and operating. See www.lanair.com for more detailed instructions if needed.

NOTE: It is **VERY IMPORTANT** that the barometric damper is set to the required settings to ensure the natural draft of exhaust gases.

- Depending on the type of fuel used, the elevation, temperature, and oil viscosity, the combustion air baffle will need to be adjusted for optimum performance. Moving the combustion air baffle clockwise will give the burner less air, while moving the combustion air baffle counterclockwise will give the burner more air.

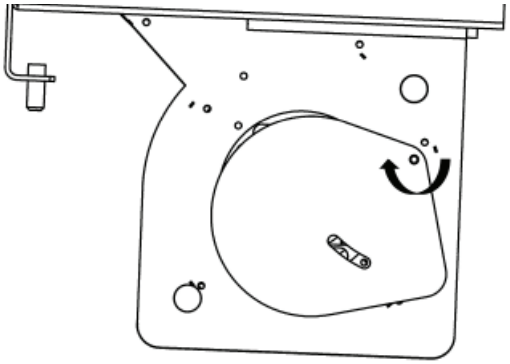

LESS COMBUSTION AIR

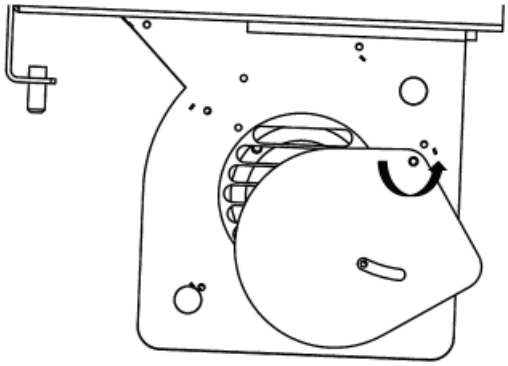

MORE COMBUSTION AIR

- When the room thermostat setting is met the burner will shut off, but the fan will continue to operate until the cabinet temperature drops to 100º F, or below.

Flame Adjustment

- Start the heater, let it run for at least 15 minutes to reach operating temperature before proceeding.
- Check the chimney draft, set the barometric damper to -0.05 WC when hot and running.
- Check the atomizing air pressure on the heater is between 12 and 16 PSI (running).
- Ensure that the fuel pressure is consistent with no fluctuation.

NOTE: MECHANICAL EQUIPMENT IS NOT ALWAYS 100% ACCURATE. VISUAL INSPECTION OF THE FLAME IS REQUIRED.

CAUTION

See Flame Adjustment. Periodically examine flame and adjust if needed.

⚠CAUTION

NOTE: ALWAYS WEAR EYE, FACE, BREATHING PROTECTION AND PROTECTIVE CLOTHING WHEN INSPECTING OR ADJUSTING FLAME.

Lift the inspection port cover on the front of the combustion chamber to observe the flame. When the unit is adjusted properly the ash inside the chamber will be white to off white.

Flame tips touching the end of the chamber (bucket) will cause combustion chamber damage. This condition may be caused by a worn nozzle or not enough combustion air. When this condition exists, the ash in the chamber will be brown to black.

If your oil is too cold, you may see oil “sparklers” or ignition problems.

If your unit is producing black soot, please contact Lanair.

Flame is CORRECT
Bright yellow in color.

- Flame extends into the chamber.
- Flame is not impinging on the chamber walls.
- No black smoke coming from the chimney.
- Ash inside the chamber is white to off white in color.



If you need assistance with flame adjustment, please call Lanair Technical Phone Support, or see the flame adjustment video at www.lanair.com/videos.

⚠CAUTION

DO NOT OVER FIRE YOUR HEATER. IMMEDIATELY ADJUST THE BURNER TO THE PROPER FLAME LENGTH TO PREVENT DAMAGE TO YOUR HEATER.

⚠CAUTION

CHECK FLAME DAILY. ADJUST ACCORDINGLY.

NOTES:

LS SERIES HEATER MAINTENANCE & SERVICE

DAILY	WEEKLY	MONTHLY	ANNUALLY (Season Shut Down)
• Check fuel supply tank level (prestrain all fuels). • Check vacuum gauge reading on suction line. • Check atomizing air pressure at the air regulator. Verify pressure setting. Drain water from the bowl if necessary. • Visually inspect flame. Adjust accordingly. • Check draft using a manometer. Set draft to -.02 cold, -.05 hot. • **If heater is not to be used for more than 12 hours (overnight) flip the preheater rocker switch off (light off).** **NOTE: Wear adequate eye, face, and breathing protection.**	• Drain water/antifreeze from the fuel supply tank. • Check the air pressure setting on the heater's air regulator. Set to 12-16 PSI (running). • Drain water from the air pressure supply line. • Inspect the combustion, ash buildup and flame. **NOTE**: **Wear adequate eye, face, and breathing protection.**	• Check combustion chamber. Clean if necessary. Inspect insulation. • Clean the chimney, chimney connector, and barometric damper. • Check for dirt build-up on the combustion blower wheel. Keep wheel clean. • Check nozzle and turbulator for oil buildup; clean/adjust if necessary. **NOTE**: **Wear protective clothing, adequate eye, face, and breathing protection. Do not breathe dust from the combustion chamber. Wash hands thoroughly with soap and water after cleaning chamber.**	• Flip air/fuel pre heater switch off or shut off main power supply to heater. • Perform monthly maintenance and service. • Shut off air supply. • Replace filter. • Drain and clean fuel supply tank. • Clean preheater. • Clean combustion blower, fan, and blades. • Gasket kit minimum (bronze kit preferred).

Remove ash from combustion chamber every 750-1000 hours of run time and at the end of every heating season.

Replacing the Filter

Replace filter once per year or if clogged. The filter may be clogged if vacuum gauge pressure is higher than standard operating pressure. If fuel is extremely dirty, this filter may need to be replaced more frequently.

To replace filter:

- Disconnect power to the heater.
- Close firestop valve between filter head and tank.
- Spin the old filter counterclockwise off of the head and discard appropriately. Use a filter wrench if necessary.
- Clean and dry the filter head and threads.
- Lubricate the seal with some oil and spin the new filter clockwise onto the head and tighten. Use a filter wrench if necessary.
- Prime the fuel pump and ensure there are no leaks/air bubbles.

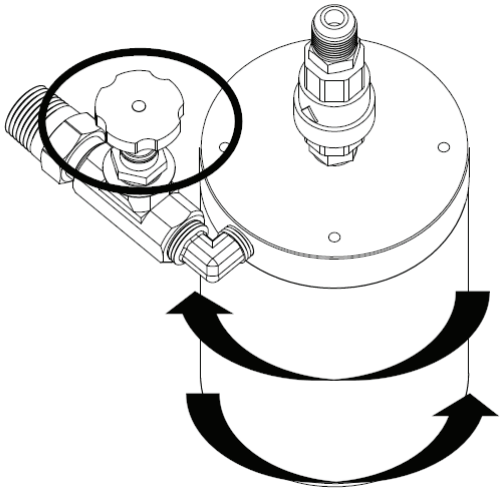

USE LANAIR OEM FILTERS OR YOU MAY DAMAGE YOUR FUEL PUMP OR BURNER.

Replacing Fuel Pump/Pump Assembly

- Disconnect power to the heater.
- Close firestop valve between filter head and tank.
- Loosen necessary fittings to pump or pump assembly.
- Remove pump cover.
- Loosen the coupler set screw on the pump shaft.
- Remove the pump mounting bracket screws, washers, and spacers from the pump housing.
- Remove old pump or pump assembly.
- Attach new pump or pump assembly to pump housing using the pump mounting bracket screws, washers, and spacers.
- Tighten the coupler set screw on the pump shaft. Ensure set screw is contacting the machined flat on the pump shaft.
- Tighten necessary fittings to pump or pump assembly.
- Reinstall pump cover.
- Prime the fuel pump and ensure there are no leaks.

Ignitor Replacement/Adjustment

- Disconnect power to the heater.
- Remove the preheater assembly from inside the burner assembly.
- Remove the retaining nut and carefully remove the ignitor from the preheater.
- Install a new one piece ignitor (P/N 3728) to the top of the preheater, if necessary.
- Adjust the position of the ignitor and tighten the nut to secure it in place.

The tips of the ignitor should be 1/2” above the center of the nozzle assembly and should extend approximately 1/8” beyond the end of the nozzle. The gap between the electrode tips of the ignitor should measure 1/8” at the closest point.

- Use the tool included with the heater to set the position of the preheater, then secure it in place. The tool is located on the burner chassis between the preheater and the terminal block.

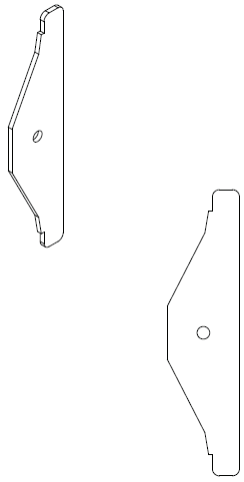

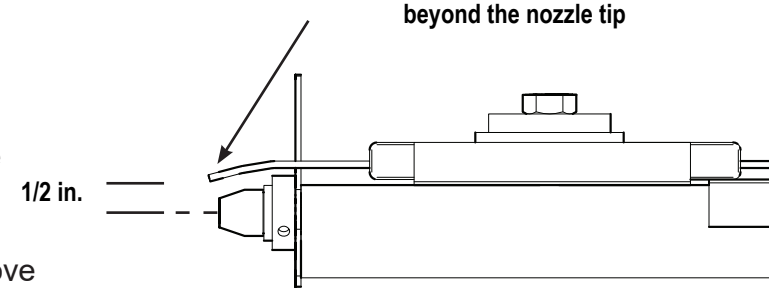

Side View

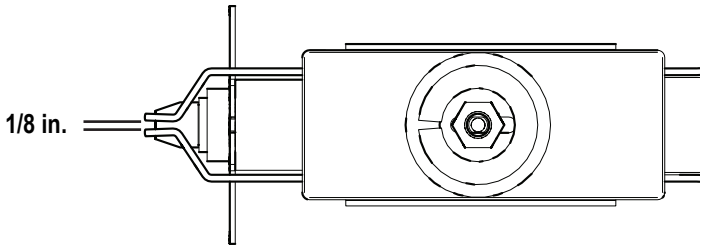

Top View

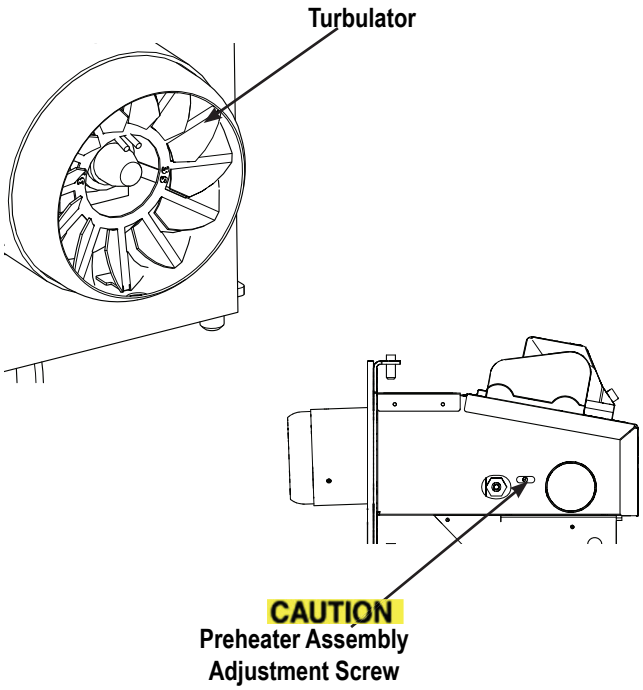

Nozzle Cleaning/Replacement

- Periodic cleaning of the nozzle assembly may be required.
- Carefully remove nozzle from the air preheater block.
- Disassemble the nozzle as shown and clean thoroughly. Reassemble nozzle.
- Carefully remove the o-ring from the nozzle and inspect. Replace if necessary.
- Lubricate o-ring and pin/seat.
- Insert clean/new nozzle into the air preheater block and tighten.

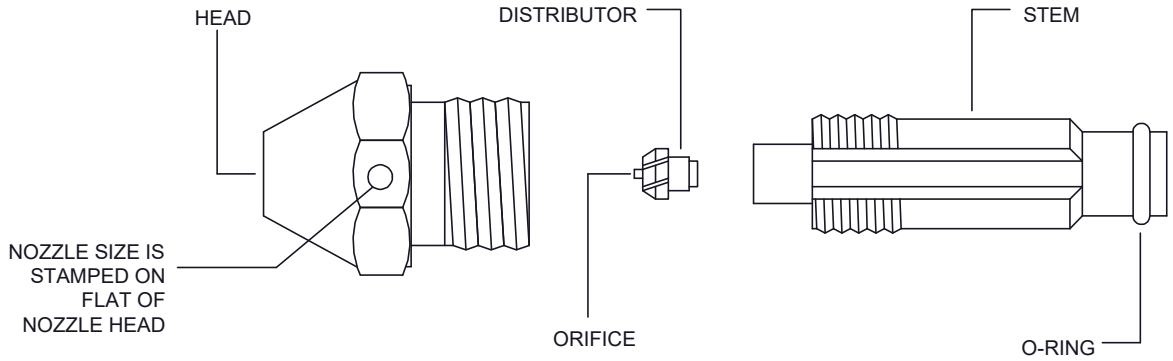

Failure to properly seat the nozzle threads may result in leakage and improper burner operation.

ONLY USE LANAIR OEM NOZZLES OR YOU MAY DAMAGE YOUR BURNER.

⚠ CAUTION

NOTE: ALWAYS WEAR EYE, FACE, BREATHING PROTECTION AND PROTECTIVE CLOTHING WHEN INSPECTING OR CLEANING CHAMBER.

⚠ WARNING

WARNING: DISCONNECT ALL ELECTRICAL POWER TO HEATER BEFORE SERVICING.

Cleaning Combustion Chamber (Burner Side)

- Turn thermostat to the lowest setting; the heater must be completely cool to the touch before attempting to clean the heater (place the fan/limit on the manual position to start the fan and shorten the cooling time if the unit is hot).
- Turn compressed air off at your secondary air regulator and disconnect the air inlet on the burner.
- Turn off all power to the heater (120 VAC) at the main disconnect.
- Carefully unscrew and disconnect the burner cord connecting the burner to the heater.
- Remove the 2 nuts on the left side of the burner and swing open.

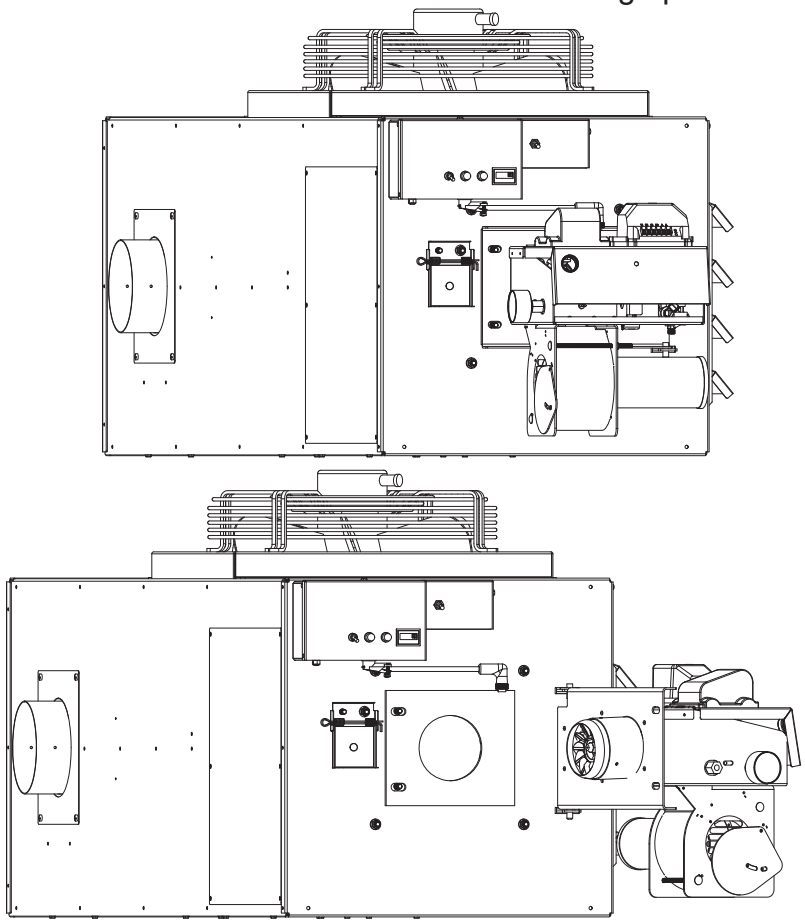

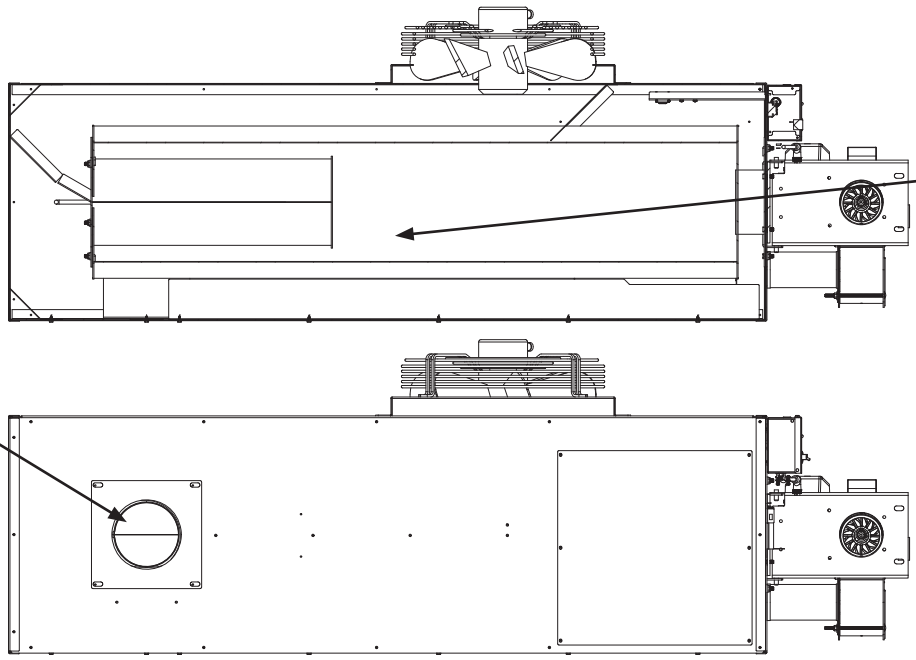

- Clean the combustion chamber and remove ash and debris by scraping, shoveling, or brushing. Inspect the combustion chamber for any holes or cracks.
- Open chimney cap and use an industrial type canister vacuum cleaner with a high efficiency filter to remove ash and debris from shoveling and brushing.
- Reinstall chimney cap. Inspect and clean chimney connector on opposite side if necessary.
- Reinstall burner door gasket. Replace if damaged or misaligned.
- Swing the burner closed and reinstall burner door nuts.
- Align the notch on the burner cord with the notch on the receptacle and reconnect.
- Reconnect all power at the main breaker box.
- Turn compressed air back on at your secondary air regulator and reconnect the air inlet on the burner.
- Allow ten minutes before turning the thermostat up for your preheater to reach operating temperature. Your heater is now ready for normal operation.

CAUTION **Insufficient or irregular cleaning intervals will cause inefficiency, random shutdowns, and extreme damage to the combustion chamber.**

⚠WARNING

WARNING: DO NOT OPERATE YOUR FURNACE WITH CLEAN OUT PANELS OR PORTS REMOVED.

⚠ CAUTION

NOTE: ALWAYS WEAR EYE, FACE, BREATHING PROTECTION AND PROTECTIVE CLOTHING WHEN INSPECTING OR CLEANING CHAMBER.

⚠ WARNING

WARNING: DISCONNECT ALL ELECTRICAL POWER TO HEATER BEFORE SERVICING.

Cleaning Combustion Chamber (Bucket Side)

- Turn thermostat to the lowest setting; the heater must be completely cool to the touch before attempting to clean the heater (place the fan/limit on the manual position to start the fan and shorten the cooling time if the unit is hot).
- Turn compressed air off at your secondary air regulator and disconnect the air inlet on the burner.
- Turn off all power to the heater (120 VAC) at the main disconnect.
- Carefully unscrew and disconnect the burner cord connecting the burner to the heater.
- Remove the back panel from the heater to expose the heat exhanger and bucket.
- Spray all of the bolts that secure the bucket with penetrating oil to prevent breakage before removing nuts. Let set for five minutes to allow the oil to penetrate.
- Remove bolts holding bucket in place.
- Remove the bucket and gasket.
- Clean the combustion chamber by using an industrial type canister vacuum cleaner with a high efficiency filter, or suitable tool. Remove ash and debris by vacuuming, shoveling, or brushing. Inspect the combustion chamber for any holes or cracks.
- Vacuum any debris that falls into the cabinet from your chamber.

Before removing back

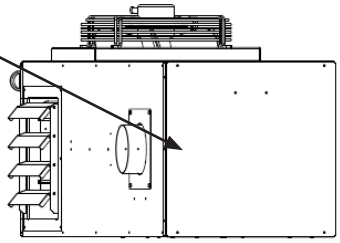

After removing back panel

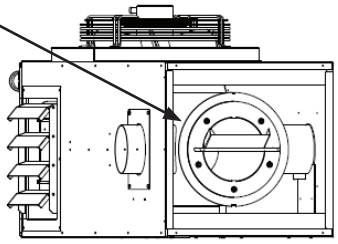

After removing bucket and gasket

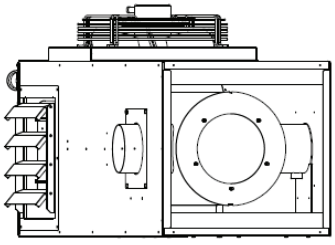

CAUTION **Insufficient or irregular cleaning intervals will cause inefficiency, random shutdowns, and extreme damage to the combustion chamber.**

⚠ CAUTION

CAUTION: THE BUCKET MUST HAVE AN AIR TIGHT SEAL TO PREVENT EXTREME DAMAGE TO THE COMBUSTION CHAMBER.

CAUTION

CAUTION: TO AVOID BOLT BREAKAGE, DO NOT OVERTIGHTEN.

- Before reinstalling the bucket, replace the white gasket seal. When replacing the gaskets apply a light film of gasket adhesive to adhere the new gasket to combustion chamber.
- Lube the threads of the bolts with a high temperature lubricant (anti-seize). Reinstall the bucket. If any bolts or nuts are stripped, replace them.
- Reinstall the galvanized panel. Be sure to slide the panel on from top to bottom, ensuring the air baffle on the back panel sits on top of the air baffle in the bucket.
- Inspect and clean the chimney connector if necessary.
- Align the notch on the burner cord with the notch on the receptacle and reconnect.
- Reconnect all power at the main breaker box.
- Turn compressed air back on at your secondary air regulator and reconnect the air inlet on the burner.
- Allow ten minutes before turning the thermostat up for your preheater to reach operating temperature. Your heater is now ready for normal operation.

CAUTION Insufficient or irregular cleaning intervals will cause inefficiency, random shutdowns, and extreme damage to the combustion chamber.

⚠ WARNING

WARNING: DO NOT OPERATE YOUR FURNACE WITH CLEAN OUT PANELS OR PORTS REMOVED.

⚠ WARNING

WARNING: REPLACE ALL GASKETS REMOVED DURING CLEANING. DO NOT REUSE GASKETS.

Troubleshooting

When an operating problem occurs, a determination must be made whether or not the fuel pump is pumping a sufficient amount of oil that contains no air or water.

Take these steps

- Turn the thermostat off or to a temperature below room temperature.
- Disconnect the fuel supply line from the burner.
- Insert the fuel line into a receptacle (flow rate varies by model).
- Toggle the priming switch from the “RUN” position to the “PRIME” position
- Attempt to fill the container, keeping the fuel line above the tank’s fuel level.
- A steady stream of oil should flow from the fuel line.
- Measure and compare the flowrate collected with your receptacle to the flowrates posted below. Verify your unit is within +/- 10% of the posted flowrate.
- If the pump will not pump fuel, attempt to prime the pump. If the pump won’t prime refer to trouble-

Model	gal/hr	mL/min	oz/min
LS-150	1.1	69	2.35
LS-225(D)	1.6	101	3.41
LS-300(D)	2.0	126	4.27

If flow rate is incorrect by more than +/- 10%, contact Lanair Technical Support at 888-370-6531.

After repairs are made, toggle the priming switch from the “PRIME” position to the “RUN” position, reconnect the fuel supply line to the burner, and reset the thermostat.

⚠ WARNING

WARNING: DO NOT OPERATE YOUR HEATER IF THE OIL PRIMARY SAFETY CIRCUIT IS NOT WORKING!

Vacuum Gauge Reading Guide

No Reading (0–1 in. Hg).
- Pump not operating.
- Pump air locked and needs priming.
- Vacuum leak:
  - Pump shaft seal.
  - Suction strainer gaskets.
  - Suction-side pipe connections.
  - Examine check valve and clean if needed.
  - Pump cover gasket.
  - Low fuel level in tank.
  - Strainer in pump cover.

Low to Normal Reading (1–6 in. Hg).
- Pump operating properly.
- Fuel oil is being used.
- Fuel has low viscosity.
- Fuel is at room temperature (warm).
- Excess gasoline mixed in fuel (use approved fuels only).

High Reading (7 in. Hg or higher).
- Fuel viscosity too high.
- Fuel is too cold.
- Suction line strainer dirty or plugged.
- Check valve installed wrong or stuck.
- Fuel contains gear lubes (use approved fuels only).

Fluctuating Reading (Jumping).
- Vacuum leak on suction side of piping.
- Low fuel level in tank.

Burner fuel pressure gauge reading hints

Fuel gauge fluctuates (jumps)

- Leak in suction line plumbing.
- Water/Antifreeze in fuel.
- Air in fuel, refer to troubleshooting chart symptom B.
- Seal in adapter block may be worn or damaged.
- Suction line filter plugged or dirty.

Reading gradually decreases

- Fuel pump output decreasing.
- Fuel viscosity decreasing.
- Orifice in nozzle is wearing.

Reading gradually increases

- Fuel pump output increasing.
- Fuel viscosity increasing (cold fuel, and/or gear lube).
- Orifice in nozzle is becoming plugged.

Reading drops to 0 PSI when the burner is off

- Leak in the plumbing connections.
- Leak in the preheater assembly (damaged or missing o-ring).
- Fuel preheater switch is off.

Symptom	Possible Cause	Corrective Action
A. Burner will not start.	1. Main electrical power circuit breaker tripped.	1. Reset breaker.
	2. Service disconnect switch off or fuse blown.	2. Turn switch on or replace fuse.
	3. Thermostat turned down/improperly installed/defective.	3. Turn thermostat up/check wires/test components/replace.
	4. Oil primary controller tripped/defective.	4. Reset/test components, replace if needed.
	5. Too much light showing on flame sensor/sensor defective or wiring issue.	5. Eliminate light exposure at flame sensor/replace.
B. Burner attempts to fire but does not establish a flame.	1. Low fuel supply or contaminated fuel.	1. Fill tank/drain tank and replace.
	2. Clogged or worn nozzle.	2. Clean or replace.
	3. Fuel pressure gauge fluctuating/ pumping system.	3. Check pump fittings/priming/ vacuum leak; purge air from supply lines.
	4. Preheater switch is turned off/ defective or cartridge heaters are defective.	4. Move switch to “ON” position test switch and cartridge heaters/replace if needed.
	5. Transformer/electrodes not sparking.	5. Test transformer/look for short-circuit contact(s) and reposition/replace if needed.
	6. No air pressure/defective solenoid.	6. Confirm air supply is ON, test solenoid/replace defective components.
	7. Water in air system.	7. Clean air preheater and purge water from air system.
	8. Combustion blower not properly adjusted/defective.	8. Adjust flame and replace blower if necessary.
	9. Improper draft.	9. Ensure chimney is properly installed/ adjust barometric damper.
	10. Clogged combustion chamber or chimney.	10. Clean heater and chimney.

Symptom	Possible Cause	Corrective Action
C. Burner fires but then trips primary control.	1. Contaminated fuel supply (water/antifreeze/gear lube)/ dirty fuel filter.	1. Drain and clean fuel supply tank/clean or replace fuel filter.
	2. Improper draft.	2. Ensure chimney is installed properly and draft is set.
	3. Clogged combustion chamber or chimney.	3. Clean heater/chimney.
	4. Incorrect air pressure.	4. Adjust flame settings.
	5. Incorrect fuel pressure.	5. Check fuel supply and flame adjustment.
	6. Improper combustion air baffle setting/combustion blower is defective.	6. Adjust flame/test combustion blower motor/ replace if needed.
	7. Oil primary control/flame sensor defective, flame sensor and/or turbulator improperly adjusted/dirty.	7. Clean/test/adjust components/replace if needed.
	8. Clogged nozzle and/or preheater assembly.	8. Clean/replace nozzle and/or preheater assembly.
D. Preheater assembly not working.	1. Cartridge heaters defective/ disconnected.	1. Test cartridge heaters using an Ohm meter. Air heater = 112 Ω ±10% Oil heater = 37 Ω ±10%
	2. Snap disc defective.	2. Test snap disc for continuity when preheater is cold. Test individual snap discs with wires removed to be sure there is continuity across both terminals.

Return Guidelines

1. All returned merchandise must be unused and returned in the same new condition in which it was originally received, with all accompanying original packaging. Any items returned used, damaged in any way or with missing components will not be refunded. Return merchandise must be shipped freight prepaid.

2. All returns must be authorized by the Lanair Customer Service Department. Unauthorized returns will NOT be accepted or refunded, and may be refused when received.

3. Authorized returns for merchandise in original boxes and in new condition are subject to a 20% restocking charge. No returns are accepted on custom or special order items. Electrical components may be subject to inspection.

4. All returns must be made within thirty (30) days after the date of the shipment for orders within the United States. For foreign orders, the return must be made within sixty (60) days of the initial shipment.

5. All authorized returns will be fully refunded less restocking fees, shipping and handling charges.

6. To obtain an authorization number, please call Technical Phone Support at 1-888-370-6531, or email us at service@lanair.com.

7. All authorized returns must have the authorization number marked on the outside of the package and returned to the following address:

Lanair Products LLC
Returns Department
4109 Capital Circle Drive
Janesville, WI 53546

Warranty Conditions

Lanair Products LLC (Manufacturer) warrants to the original purchaser of this used oil heater, that it will repair or replace at Lanair Products LLC's option, any part which is in normal use proves to be defective in material or workmanship within a period of one year from the date of purchase, provided same is returned (transportation prepaid) F.O.B. Janesville Wisconsin, for Lanair Products LLC's inspection and warranty
determination. Normal wear and tear items are not covered. Lanair Products does not warrant paint finish. The warranty does not cover labor charges involved with part
replacement or service unless preauthorized in writing. Lanair Products LLC may also require photographs of the heater installation for warranty determination.

LANAIR PRODUCTS LLC 1/10/LIFETIME LIMITED WARRANTY

ALL WARRANTY TERMS DEPENDANT ON REGISTRATION WITHIN 30 DAYS OF RECIEVING UNIT

We stand by the quality of every component in your heating solution. Our **1-year warranty** on all parts ensures that you have peace of mind, knowing that any eligible part replacements are covered within the first year of your purchase.

10 Year Limited Warranty on the Combustion Chamber

The heart of your heating system deserves special attention. With our **10-year limited warranty** on the combustion chamber, you receive extended coverage for these critical components. This commitment reflects our confidence in their durability and performance, providing you with reliable warmth for an extended period of time.

Lifetime Free Technical Support Over the Phone

We believe in supporting our customers beyond the warranty period. Enjoy the benefit of **lifetime free technical support** over the phone. Our dedicated team of experts is ready to assist you with any inquiries, troubleshooting, or guidance you may need, ensuring that your heating system continues to operate efficiently for a lifetime.

At Lanair Products LLC we prioritize your satisfaction and aim to exceed your expectations with our comprehensive 1/10/LIFETIME warranty. Trust in the reliability of our products, backed by a commitment to quality, durability, and ongoing support.

Model Number: LS Series Heater Date Purchased:_____

Lanair Products LLC warrants the combustion chamber for a period of three (3) years from the date of purchase, subject to the following conditions:

3-Year Coverage Conditions

- Approval via the submission of installation pictures through the provided submittal sheet is required for 3-year coverage.
- If no pictures are submitted, the end-user waives their right to 3-year coverage and is instead covered for 1 full year from the DATE OF PURCHASE.
- The manufacturer reserves the right to request an installation picture submittal to approve or deny warranty claims if one is not submitted within 90 days of unit delivery.
- After the initial three (3) years, the warranty coverage will be prorated according to the following schedule:

Pro Rated Schedule

- If a defect occurs during the first three years and meets the specified conditions, the manufacturer will repair or replace the combustion chamber free of charge. *Payment of freight and installation is the responsibility of the end-user.*
- If a defect occurs in years four through ten (4-10), the manufacturer will repair or replace your combustion chamber. Your guaranteed replacement coverage will be prorated to 50% of the retail price, **excluding any sales pricing**.

IMPORTANT: Combustion chamber must be maintained in accordance with the installation and operating instructions. This extended warranty does not cover normal wear items such as gasket material, chamber inserts, nuts, bolts, labor costs, etc. Warranty is limited to the original purchaser.
Lanair Products LLC's determination regarding repair or replacement is final. The cost of freight is the owner's responsibility.

Conditions That Will Void Warranty:
Use of liquids such as: solvents, brake fluid, gasoline, K-1, kerosene, paint thinners, gear lube, transformer oil, cutting oils, antifreeze, water, or any other liquid not approved for use, inadaquate chimney, tampering with internal components, failure to inspect and clean combustion chamber at the end of each heating season, continuous over-firing of the unit, or alteration or misuse of any part.
NOTE: A restocking fee of 20% applies to all returned parts.
Items Not Covered Under Warranty:

- Any portion of the combustion chamber if:
- **The unit is not installed per the owner's manual.** *Please refer to manual for vital information on venting and draft.*
- The yearly inspection requirements are not current.
- If the heater is used for a purpose for which it is not intended.
- The heater has not been installed or serviced in accordance with the installation/operating manual.
- If any alterations or unauthorized repairs are made to the unit.
- Damage incurred from abuse, neglect, shipping, natural acts, misuse, or accident.
- Labor costs for service calls for any reason, including:
- Cleaning or performing required maintenance.
- Installation corrections.
- Any parts installation.
- Parts that are replaced because of normal wear and tear.

Contact Lanair Technical Phone Support at 1-888-370-6531

LANAIR WASTE OIL HEATERS

NOTES:

Lanair Products LLC

4109 Capital Circle, Janesville, Wisconsin 53546

1-888-370-6531

www.lanair.com

REGISTER YOUR HEATER HERE:

© 2026 Lanair Products LLC
Lanair is a registered trademark of Lanair Products LLC
Part # 81013090
Rev. F - Q4, 2026