Model # MXB 400

LANAIR®

Lanair® is proud to announce the addition of waste oil fired boilers to our line of quality products.

These boilers feature the finest ASME tested, cast cores from Germany and the latest MX Series Burner technology from Lanair.

As always, these quality boilers are available at the lowest price available!

Additional Features:

- Swing Open Burner Door
- Compact Design
- Three pass Scotch Marine design
- Lanair High Performance MX Series Burner
- 400,000 BTU per hour/105kw hour
- 2.86 G.P.H. •120V- 60 HZ

UL Listed

Suggested Retail Price: $12,199

$7995

Special Introductory Price For a Limited Time
(In U.S. Dollars F.O.B Janesville, WI, U.S.A.)

Dimensions

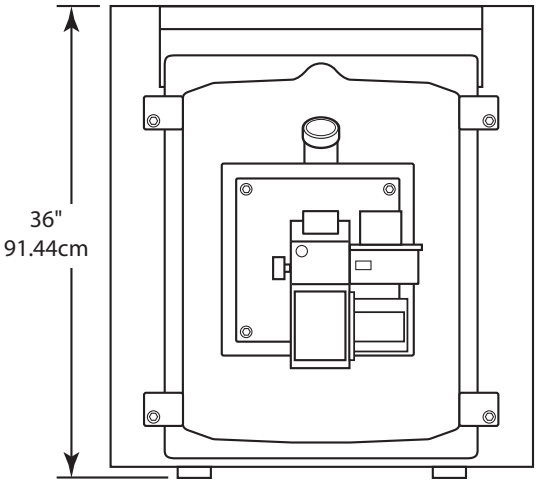

EST WT: 1900 lbs.
862 kilos.

BOILER DESIGN

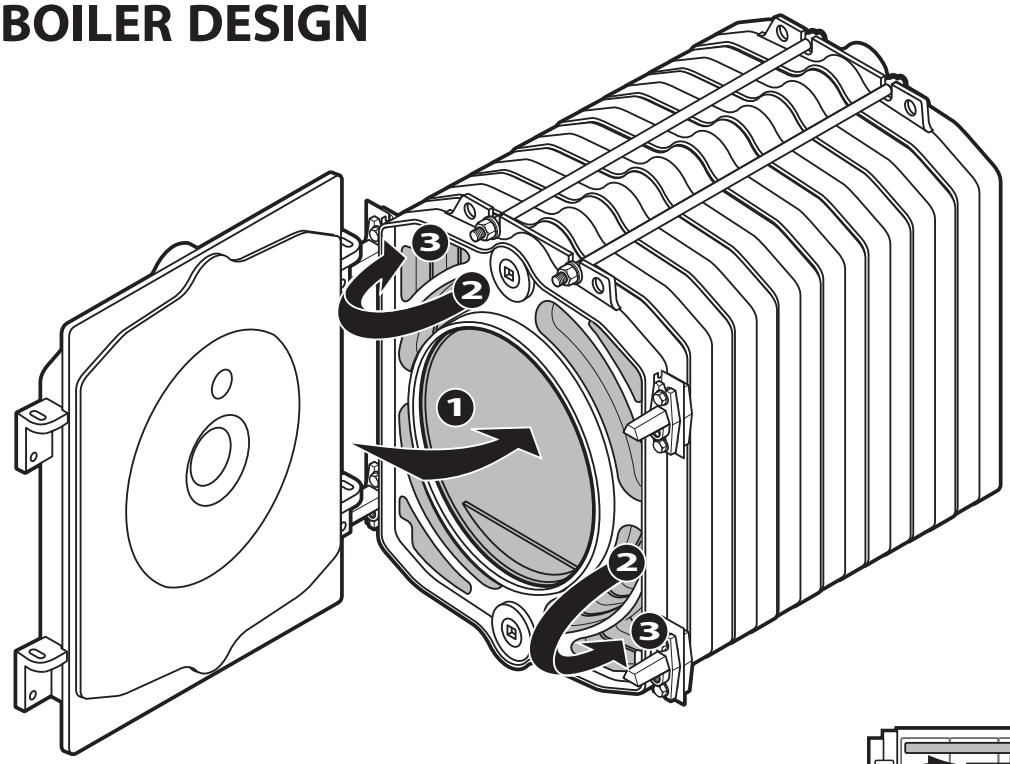

This unique and dependable 3-pass wet base principle is built on the "Scotch Marine" design.

Fuel economy is optimized by the completely cylindrical combustion chamber **(1st pass)**.

Flue gases are directed into four of the concentric annular passageways **(2nd pass)**.

The gases return to the front of the boiler, and enter remaining passageways **(3rd pass)**, which lead to the rear flue outlet.

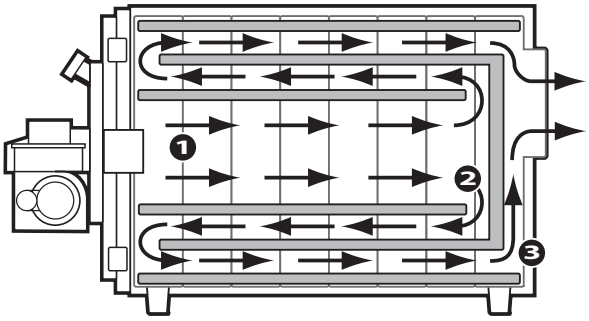

The Lanair MX Series Boiler is designed for applications requiring a high efficiency, compact, hydronic boiler. Cast iron sections are fully assembled. The rugged swing door exposes all heating surfaces for direct visual inspection and facilitates maintenance. Circular water backed furnace design requires no refractory combustion chamber. The supply manifold speeds installation and simplifies placement of controls.

The unique 3-pass "Scotch Design" delivers high operating efficiencies and its responsiveness is unmatched due to the relatively low mass and low water volume.

The MX Series Boiler is designed for commercial applications requiring an efficient and responsive hydronic heating boiler. The compact size permits multi-boiler modular installation for larger heating loads.

NOTE: Boiler must be installed to local codes by a licensed HVAC/Hydronic contractor.

Design Features:

- Cast iron boiler sections - fully assembled.
- Cast iron push nipples and woven glass rope between sections.
- Three-Pass "Scotch Marine" design: The flame travels through three passes which are under positive pressure, maximizing the heat transfer to boiler water and allowing very little chimney heat loss.
- Rear flue outlet
- Hinged Front Door: Instant access to burner and firebox to minimize maintenance time.
- Exclusively designed for forced hot water circulation, which minimizes thermal shock.
- Powder Coated Texture Insulated Jacket
- 10 Year Limited Warranty